GENETIC STRUCTURE OF NORTHERN FLYING SQUIRREL (*GLAUCOMYS SABRINUS*) AND RED SQUIRREL (*TAMIASCIURUS HUDSONICUS*) POPULATIONS IN THE BLACK HILLS

BY

Alyssa M. Kiesow

B.S., South Dakota State University, 2000
M.S., South Dakota State University, 2003

A Dissertation Submitted in Partial Fulfillment of
The Requirements for the Degree of
Doctor of Philosophy

College of Arts and Sciences
Biological Sciences
The University of South Dakota
August 2008

Copyright by
ALYSSA M. KIESOW
2008
All Rights Reserved

The members of the Committee appointed to examine the dissertation of Alyssa M. Kiesow find it satisfactory and recommend that it be accepted.

_____
Chairperson, Dr. Hugh Britten

_____
Dr. Lisa Wallace

_____
Dr. Daniel Soluk

_____
Dr. Molly Nepokroeff

_____
Dr. Charles Dieter

ACKNOWLEDGEMENTS

I would like to thank my graduate committee (Dr. Hugh Britten, Dr. Lisa Wallace, Dr. Daniel Soluk, Dr. Molly Nepokroeff, and Dr. Charles Dieter) for their assistance with my project. A special thanks goes to Dr. Hugh Britten (major advisor), for his added efforts with my research and writing, Dr. Lisa Wallace, for her expertise and assistance, and Dr. Charles Dieter, for his guidance and support.

The South Dakota Department of Game, Fish and Parks in Pierre, South Dakota provided my research funding through a State Wildlife Grant (Grant Number 2414), which was allocated by the United States Fish and Wildlife Service. The University of South Dakota provided additional financial assistance through matching funds and by providing me with a research fellowship through the University of South Dakota Alumni Foundation in order to conduct my research. Without the research funding and fellowship, my research would have been difficult to conduct.

I am thankful for the help provided to me by several individuals. Melissa Hough, a Master of Science graduate, trapped areas of the Black Hills for three years, collecting samples from each squirrel for my genetics research. She is a great researcher and friend. Dr. Mitchell McGaughlin assisted with the numerous microsatellite and DNA sequence "runs" on the infamous ABI Prism sequencer. Mitch Greer and Samuel Cahoy were integral in the collection of samples west of the Black Hills, and Brittany Seiler was important to the collection of samples east of the Black Hills and dissection of red squirrels. All of these individuals put forth much time and effort toward my research, and I am grateful for their assistance.

A sincere thank you goes out to state and federal biologists and their respective agencies for their assistance in obtaining samples for genetic data analyses. These agencies include Montana Parks and Wildlife Commission, Custer National Forest, Black Hills National Forest, Shoshone National Forest, Payette National Forest, Utah Department of Wildlife, Wyoming Game and Fish Commission, Bighorn National Forest, Medicine Bow National Forest, Kootenai National Forest, Minnesota Department of Natural Resources, and Wisconsin Department of Natural Resources. It was a pleasure working with each individual and their respective agencies.

Finally and most importantly, special thanks go to my husband, Joshua Kiesow; my daughter, Kaylee Kiesow; and my parents, Thomas and Karla Kalis, for inspiring me to reach my goals and supporting me along the way. Without their help, I would not have achieved my goals. My sister and brother-in-law, Joalle and Daniel Holmberg; my nephew, Samuel Holmberg; and my husband's parents, Redgy and Christine Kiesow, receive special thanks for helping me stay strong and positive. Josh, my loving husband and best friend, provided encouragement and comfort during trialing times, and I love and cherish all the moments we have together.

ABSTRACT

GENETIC STRUCTURE OF NORTHERN FLYING SQUIRREL (*GLAUCOMYS SABRINUS*) AND RED SQUIRREL (*TAMIASCIURUS HUDSONICUS*) POPULATIONS IN THE BLACK HILLS

By
Alyssa M. Kiesow
May 2008

The Black Hills are unique geological formations with coniferous and prairie vegetation, and are essentially a forested island in a lowland grassland area that is disjunct from surrounding montane areas. We trapped northern flying squirrels (*Glaucomys sabrinus*) and red squirrels (*Tamiasciurus hudsonicus*) in the Black Hills from 2005 to 2007 to collect ear samples to elucidate genetic structure of these populations. In addition, we trapped these squirrels in Montana, Wyoming, Idaho, Utah, Minnesota, and Wisconsin to help infer population phylogenies with special consideration of the Black Hills population. Microsatellite loci and mtDNA sequences were used for various genetic data analyses on parentage, genetic structure, and phylogeography. Populations of these squirrels have low observed heterozygosity, i.e., lower than what is expected. In parentage analyses, flying squirrels have 29 true parent pairs of populations sampled at the 80% confidence level with ~0.5 relatedness among pairs. Red squirrels have 60 true parent pairs of populations sampled at the 80% confidence level with ~0.3 relatedness among pairs. In genetic structure analyses, flying squirrels likely have two to three subpopulations in the areas sampled, according to STRUCTURE and GENELAND, but little to no substructure, as indicated by low FST (0.04). Individuals from the northern Black Hills provide more migrants (~4) to the central Black Hills than to other regions, though this is not recent. Red squirrels likely have two to three subpopulations in the areas sampled, according to STRUCTURE and GENELAND, and weak substructure, as indicated by low FST (0.03). The subpopulation in the central Black Hills seems to be isolated from other subpopulations, yet it receives migrants (~4) from the southern Black Hills, though this is not recent. For both squirrels, phylogenies group the Black Hills and Bear Lodge Mountain populations together. Both squirrels are indicated to have two to three subpopulations with weak to no substructure, which suggests that these squirrels have adequate gene flow within the Black Hills. However, phylogenetic trees show the distinctiveness of the Black Hills population, indicating lack of genetic exchange with other nearby mountain ranges. Therefore, the reclassification of subspecific names for both squirrels should be considered.

TABLE OF CONTENTS

ACKNOWLEDGEMENTS……iv

ABSTRACT…….....vi

LIST OF TABLES……...x

LIST OF FIGURES……..xiii

CHAPTER 1 – INTRODUCTION AND STUDY AREA

Introduction……...……...1

Study area……..……..……..……5

Goals of the Study……..14

CHAPTER 2 – CHARACTERIZATION AND ISOLATION OF FIVE ADDITIONAL MICROSATELLITE LOCI IN NORTHERN FLYING SQUIRRELS, *GLAUCOMYS SABRINUS* (SCIURIDAE, RODENTIA) FOR THE PURPOSES OF THIS RESEARCH

Introduction……15

Methods……..15

Results/Discussion…….18

CHAPTER 3 – PARENTAGE OF NORTHERN FLYING SQUIRREL (*GLAUCOMYS SABRINUS*) POPULATIONS IN THE BLACK HILLS

Introduction……21

Methods……..22

Results……27

Discussion……..33

CHAPTER 4 – GENETIC STRUCTURE AND LANDSCAPE GENETICS OF NORTHERN FLYING SQUIRRELS (*GLAUCOMYS SABRINUS*) POPULATIONS FROM THE BLACK HILLS

Introduction……38

Methods……..40

Results……47

Discussion……..54

CHAPTER 5 – PHYLOGEOGRAPHY OF THE NORTHERN FLYING SQUIRREL (*GLAUCOMYS SABRINUS*) POPULATION IN THE ROCKY MOUNTAINS, BLACK HILLS, AND MIDWEST

Introduction……60

Methods……..61

Results……69

Discussion……..82

CHAPTER 6 – PARENTAGE OF AMERICAN RED SQUIRREL (*TAMIASCIURIUS HUDSONICUS*) POPULATIONS IN THE BLACK HILLS

Introduction……89

Methods……..91

Results……94

Discussion……102

CHAPTER 7 – GENETIC STRUCTURE AND LANDSCAPE GENETICS OF AMERICAN RED SQUIRREL (*TAMIASCIURIUS HUDSONICUS*) POPULATIONS FROM THE BLACK HILLS

Introduction……..106

Methods……108

Results……..115

Discussion……122

CHAPTER 8 – PHYLOGEOGRAPHY OF THE N AMERICAN RED SQUIRREL (*TAMIASCIURIUS HUDSONICUS*) POPULATION IN THE ROCKY MOUNTAINS, BLACK HILLS, AND MIDWEST

Introduction……..129

Methods……130

Results……..137

Discussion……...….150

CHAPTER 9 – INTERACTIONS BETWEEN AMERICAN RED SQUIRREL (*TAMIASCIURIUS HUDSONICUS*) AND NORTHERN FLYING SQUIRREL (*GLAUCOMYS SABRINUS*) POPULATIONS IN THE BLACK HILLS BASED ON HABITAT USE AND FOOD HABITS

Introduction……...…155

Methods……157

Results……..……160

Discussion……...…….164

CHAPTER 10 – CONCLUSIONS……..……167

LITERATURE CITED……170

APPENDICES

A. Individual genotypes for northern flying squirrels from the Black Hills…...178

B. Individual genotypes for northern flying squirrels from east and west ……185

C. Matrix of genetic distances of all northern flying squirrel populations…….189

D. Individual genotypes for red squirrels from the Black Hills……..190

E. Individual genotypes for red squirrels from east and west states……..196

F. Matrix of genetic distances of all red squirrel popuations…….203

LIST OF TABLES

Table 2.1 Characterization of microsatellite loci in 79 samples of northern flying squirrel, *Glaucomys sabrinus*. Given for each locus are the annealing temperature (T_a), number of alleles observed (A), allelic size range (in base pairs [bp]), and observed heterozygosity (H_O) and expected heterozygosity (H_E). PET, VIC, and FAM refer to the fluorescent label used on each primer….....19

Table 3.1. Number of northern flying squirrel samples collected from each region of the Black Hills….....24

Table 3.2. Microsatellite loci, repeat motif, primer sequence, allele sizes, and number of alleles (A) for northern flying squirrels, as reported by Zittlau et al. (2000), Winterrowd et al. (2005), and Kiesow et al. unpublished data.....28

Table 3.3. Observed and expected heterozygosity per subpopulation of northern flying squirrels……..…29

Table 3.4. Coefficient of relatedness of northern flying squirrel parent pairs. Bolded parents have multiple mates……...33

Table 4.1. Number of northern flying squirrel samples collected from each region of the Black Hills with information (i.e., alleles. % polymorphic loci, and observed heterozygosity [H_O] and expected heterozygosity [H_E]) regarding fitness of each subpopulation. ……...41

Table 4.2. Microsatellite loci, repeat motif, primer sequence, allele sizes, and number of alleles (A) for northern flying squirrels, as reported by Zittlau et al. (2000), Winterrowd et al. (2005), and Kiesow et al. unpublished data. ……42

Table 4.3. Likelihood and alpha values from STRUCTURE analysis for northern flying squirrels. Bolded is the most likely *K*…….....47

Table 4.4. Population assignment of northern flying squirrels, in which 1, 2, and 3 represent clusters (or subpopulations), as estimated by STRUCTURE. Bolded are the best assignment per cluster……..48

Table 4.5. Pairwise FST estimates between subpopulations for northern flying squirrels. Bolded numbers indicate significance ($p < 0.05$)……..51

Table 4.6. Observed and expected heterozygosity per subpopulation for northern flying squirrels. Bolded indicates statistically significant ($p < 0.05$)……..51

Table 4.7. Migration estimates in northern flying squirrels from the Black Hills directly pulled from MIGRATE, in which 1 represents the southern subpopulation, 2 represents the northern subpopulations, and 3 represents the central subpopulations. High values associated with the central subpopulation are in bold……47

Table 5.1. Number of northern flying squirrel samples collected from each region of the Black Hills……63

Table 5.2. Identification codes and number of northern flying squirrels samples that were sequenced for mtDNA analysis from states west and east of the Black Hills……64

Table 6.1. Number of red squirrel samples collected from each region of the Black Hills…….....92

Table 6.2. Microsatellite loci, repeat motif, primer sequence, allele sizes, and number of alleles (A) for red squirrels, as reported by Gunn et al. (2005)…….96

Table 6.3. Observed and expected heterozygosity per subpopulation of red squirrels….98

Table 6.4. Coefficient of relatedness of red squirrel parent pairs. Bolded parents have multiple mates……...……...102

Table 7.1. Number of red squirrel samples collected from each region of the Black Hills with information (i.e., alleles. % polymorphic loci, and observed heterozygosity (H_O) and expected heterozygosity (H_E) regarding fitness of each subpopulation……...109

Table 7.2. Microsatellite loci, repeat motif, primer sequence, allele sizes, and number of alleles (A) for red squirrels, as reported by Gunn et al. (2005)……...110

Table 7.3. Likelihood and alpha values from STRUCTURE analysis for red squirrels. Bolded is the most likely *K*……..116

Table 7.4. Population assignment of red squirrels, in which 1, 2, and 3 represent clusters (or subpopulations), as estimated by STRUCTURE. Bolded are the best assignment per cluster…….116

Table 7.5. Pairwise FST estimates between subpopulations for red squirrels. Bolded numbers indicate significance ($p < 0.05$)…….119

Table 7.6. Observed and expected heterozygosity per subpopulation for red squirrels. Bolded indicates statistically significant ($p < 0.05$)…….119

Table 7.7. Migration estimates in red squirrels from the Black Hills directly pulled from MIGRATE, in which 1 represents the southern subpopulation, 2 represents the northern subpopulations, and 3 represents the central subpopulations. High values associated with the central subpopulation are in bold…….121

Table 8.1. Number of red squirrel samples collected from each region of the Black Hills……..132

Table 8.2. Identification codes and number of red squirrels samples that were sequenced for mtDNA analysis from states west and east of the Black Hills……...132

Table 9.1. Mean and standard deviations of home range sizes for both squirrels by sexes and regions. Values are reported in hectares (ha), and bolded values are statistically significant ($p < 0.05$)……161

Table 9.2. Habitat use of each squirrel based on four classes (i.e., structure, cover type, tree size, and percent canopy cover), as identified by the USDA Forest Service. Bolded values indicate statistical significance ($p < 0.05$)……163

Table 9.3. Normalized stable isotope ratios for atmospheric nitrogen ($\delta^{15}N_{AIR}$) and carbon ($\delta^{13}C_{PDB}$) for each squirrel species. Bolded values are statistically significant ($p < 0.05$)……164

LIST OF FIGURES

Figure 1.1. Distribution of a) northern flying squirrels (*Glaucomys sabrinus*) and b) red squirrels (*Tamiasciurus hudsonicus*) in North America as identified by Wilson and Ruff (1999)……....1

Figure 1.2. Northern flying squirrel subspecies as designated by Wells-Gosling and Heaney (1984), in which (2) represents *G. s. bangsi*……...3

Figure 1.3. Red squirrel subspecies as designated by Steele (1998), in which (4) represents *T. h. dakotensis*……...4

Figure 1.4. Five major geological regions of the Black Hills based on Larson and Johnson (1999) and Hough (2007)……..9

Figure 1.5. Sample sites in the Black Hills, which are separated into regions (north, central, south) based on year and area sampled……13

Figure 3.1. Observed heterozygosity in the total population, south subpopulation, north subpopulation, and central subpopulation of northern flying squirrels, in which 1 = GS2, 2 = GS4, 3 = GS13, 4 = FLS1, 5 = FLS6, 6 = GLSA12, 7 = GLSA22, 8 = GLSA 48, 9 = GLSA 52, and 10 = GLSA 65……29

Figure 3.2. LOD scores for assigned (above one) and excluded (one and below) parent pairs of northern flying squirrels……31

Figure 3.3. Common parent pairs with LOD scores eight or above as determined by parentage testing for northern flying squirrels……...32

Figure 4.1. Northern flying squirrel subpopulation structure from the Black Hills, in which the three colors represent the clusters……48

Figure 4.2. The right diagram shows the posterior probability of each sample for northern flying squirrels, which displays population membership. Tessellations for the spatially explicit GENELAND analysis indicate the probability that a sample belongs to a particular subpopulation ranging from low (dark color) to high (light color)……..49

Figure 4.3. Northern flying squirrel PCA established from individuals and 10 loci, in which blue indicates individuals from the south, pink indicates individuals from the north, and green indicates individuals from the central regions of the Black Hills……50

Figure 4.4. Observed heterozygosity in the total population, south subpopulation, north subpopulation, and central subpopulation for northern flying squirrels, in which 1 = GS2, 2 = GS4, 3 = GS13, 4 = FLS1, 5 = FLS6, 6 = GLSA12, 7 = GLSA22, 8 = GLSA 48, 9 = GLSA 52, and 10 = GLSA 65……51

Figure 4.5. Multilocus estimates of pairwise differentiation are plotted against distance, in which differentiation among northern flying squirrels is based on sample sites.....52

Figure 4.6. Migration rates between subpopulations of northern flying squirrels in the Black Hills. MIGRATE values are on top and BayesAss values are on bottom….54

Figure 5.1. Locations of samples sites, indicated by the red dots, for the Black Hills and state east and west of the Black Hills…….62

Figure 5.2. Neighbor-joining tree (with bootstrap values) of cytochrome b region depicting the relationship of northern flying squirrels throughout the sample regions. Samples beginning with BH* and BL* are individuals from the Black Hills (BH*) and Bear Lodge (BL*) mountains……..70

Figure 5.3. Phylogenetic relationship of northern flying squirrels using the cytochrome b region based on parsimony analysis. Samples beginning with BH* and BL* are individuals from the Black Hills (BH*) and Bear Lodge (BL*) mountains……..71

Figure 5.4. Phylogenetic relationship of northern flying squirrel using the cytochrome b region based on maximum likelihood analysis. Samples beginning with BH* and BL* are individuals from the Black Hills (BH*) and Bear Lodge (BL*) mountains. All branches have ≥70% bootstrap support……72

Figure 5.5. Neighbor-joining tree (with bootstrap values) of the control region depicting the relationship of northern flying squirrels throughout the sample regions. Samples beginning with BH* and BL* are individuals from the Black Hills (BH*) and Bear Lodge (BL*) mountains……..74

Figure 5.6. Phylogenetic relationship of northern flying squirrels using the mtDNA control region based on parsimony analysis. Samples beginning with BH* and BL* are individuals from the Black Hills (BH*) and Bear Lodge (BL*) mountains…….....75

Figure 5.7. Phylogenetic relationship of northern flying squirrels using the mtDNA control region based on maximum likelihood analysis. Samples beginning with BH* and BL* are individuals from the Black Hills (BH*) and Bear Lodge (BL*) mountains. All branches have ≥70% bootstrap values……76

Figure 5.8. Neighbor-joining tree (with bootstrap values) of both regions depicting the relationship of northern flying squirrels throughout the sample regions. Samples beginning with BH* and BL* are individuals from the Black Hills (BH*) and Bear Lodge (BL*) mountains……78

Figure 5.9. Phylogenetic relationship of northern flying squirrels using both regions based on parsimony analysis. Samples beginning with BH* and BL* are individuals from the Black Hills (BH*) and Bear Lodge (BL*) mountains……..79

Figure 5.10. Phylogenetic relationship of northern flying squirrels using both regions based on maximum likelihood analysis. Samples beginning with BH* and BL* are individuals from the Black Hills (BH*) and Bear Lodge (BL*) mountains. All branches have ≥70% bootstrap values……...80

Figure 5.11. Relationship of northern flying squirrel populations based on microsatellite data (with Nei's distances) and neighbor-joining method of analysis……...82

Figure 6.1. Observed heterozygosity in the total population and each subpopulation (south, north, and central) for red squirrels. 1 = Thu03, 2 = Thu08, 3 = Thu14, 4 = Thu21, 5 = Thu23, 6 = Thu25, 7 = Thu31, 8 = Thu32, 9 = Thu33, 10 = Thu37, 11 = Thu38, 12 = Thu41, 13 = Thu42, 14 = Thu50, 15 = Thu55, and 16 = Thu59.....98

Figure 6.2. LOD scores for assigned (above -3) and excluded (-3 and below) parent pairs for red squirrels..……..100

Figure 6.3. Common parent pairs with LOD scores zero or above as determined by parentage testing for red squirrels……101

Figure 7.1. Red squirrel subpopulation structure from the Black Hills, in which the three colors represent the clusters…….116

Figure 7.2. The right diagram shows the posterior probability of each sample for red squirrels, which displays population membership. Tessellations for the spatially explicit GENELAND analysis indicate the probability that a sample belongs to a particular subpopulation ranging from low (dark color) to high (light color)….117

Figure 7.3. Red squirrel PCA established from individuals and 16 loci, in which blue indicates individuals from the south, pink indicates individuals from the north, and green indicates individuals from the central regions of the Black Hills…...118

Figure 7.4. Observed heterozygosity in the total population and each subpopulation (south, north, and central) for red squirrels. 1 = Thu03, 2 = Thu08, 3 = Thu14, 4 = Thu21, 5 = Thu23, 6 = Thu25, 7 = Thu31, 8 = Thu32, 9 = Thu33, 10 = Thu37, 11 = Thu38, 12 = Thu41, 13 = Thu42, 14 = Thu50, 15 = Thu55, and 16 = Thu59.....119

Figure 7.5. Multilocus estimates of pairwise differentiation are plotted against distance, in which differentiation among red squirrels is based on sample sites……120

Figure 7.6. Migration rates between subpopulations of red squirrels in the Black Hills. MIGRATE values are on top and BayesAss values are on bottom……122

Figure 8.1. Locations of samples sites, indicated by the red dots, for the Black Hills and state east and west of the Black Hills……...131

Figure 8.2. Neighbor-joining tree (with bootstrap values) of cytochrome b region depicting the relationship of red squirrels throughout the sample regions. Samples beginning with BH* and BL* are individuals from the Black Hills (BH*) and Bear Lodge (BL*) mountains……138

Figure 8.3. Phylogenetic relationship of red squirrels using the cytochrome b region based on parsimony analysis. Samples beginning with BH* and BL* are individuals from the Black Hills (BH*) and Bear Lodge (BL*) mountains……139

Figure 8.4. Phylogenetic relationship of red squirrel using the cytochrome b region based on maximum likelihood analysis. Samples beginning with BH* and BL* are individuals from the Black Hills (BH*) and Bear Lodge (BL*) mountains. All branches have ≥70% bootstrap support……...140

Figure 8.5. Neighbor-joining tree (with bootstrap values) of the control region depicting the relationship of red squirrels throughout the sample regions. Samples beginning with BH* and BL* are individuals from the Black Hills (BH*) and Bear Lodge (BL*) mountains……..142

Figure 8.6. Phylogenetic relationship of red squirrels using the mtDNA control region based on parsimony analysis. Samples beginning with BH* and BL* are individuals from the Black Hills (BH*) and Bear Lodge (BL*) mountains……143

Figure 8.7. Phylogenetic relationship of red squirrels using the mtDNA control region based on maximum likelihood analysis. Samples beginning with BH* and BL* are individuals from the Black Hills (BH*) and Bear Lodge (BL*) mountains. All branches have ≥70% bootstrap values……144

Figure 8.8. Neighbor-joining tree (with bootstrap values) of both regions depicting the relationship of red squirrels throughout the sample regions. Samples beginning with BH* and BL* are individuals from the Black Hills (BH*) and Bear Lodge (BL*) mountains……..146

Figure 8.9. Phylogenetic relationship of red squirrels using both regions based on parsimony analysis. Samples beginning with BH* and BL* are individuals from the Black Hills (BH*) and Bear Lodge (BL*) mountains……...147

Figure 8.10. Phylogenetic relationship of red squirrels using both regions based on maximum likelihood analysis. Samples beginning with BH* and BL* are individuals from the Black Hills (BH*) and Bear Lodge (BL*) mountains. All branches have ≥70% bootstrap values…….....148

Figure 8.11. Relationship of red squirrel populations based on microsatellite data (with Nei's distances) and neighbor-joining method of analysis……..150

Figure 9.1. Red squirrel (purple) and northern flying squirrel (blue) home ranges in the northern Black Hills…….162

CHAPTER 1: INTRODUCTION AND STUDY AREA

INTRODUCTION

Northern flying squirrel (*Glaucomys sabrinus*) and red squirrel (*Tamiasciurus hudsonicus*) populations are found in coniferous and coniferous-deciduous forests in northern North America and parts of the Appalachian and Rocky Mountains (Wilson and Ruff 1999; Figure 1.1). Throughout most of their range, these squirrels coexist (M. Hough pers. comm.). There are 25 subspecies of northern flying squirrels and 27 subspecies of red squirrels recognized by the American Society of Mammalogists

a) b)

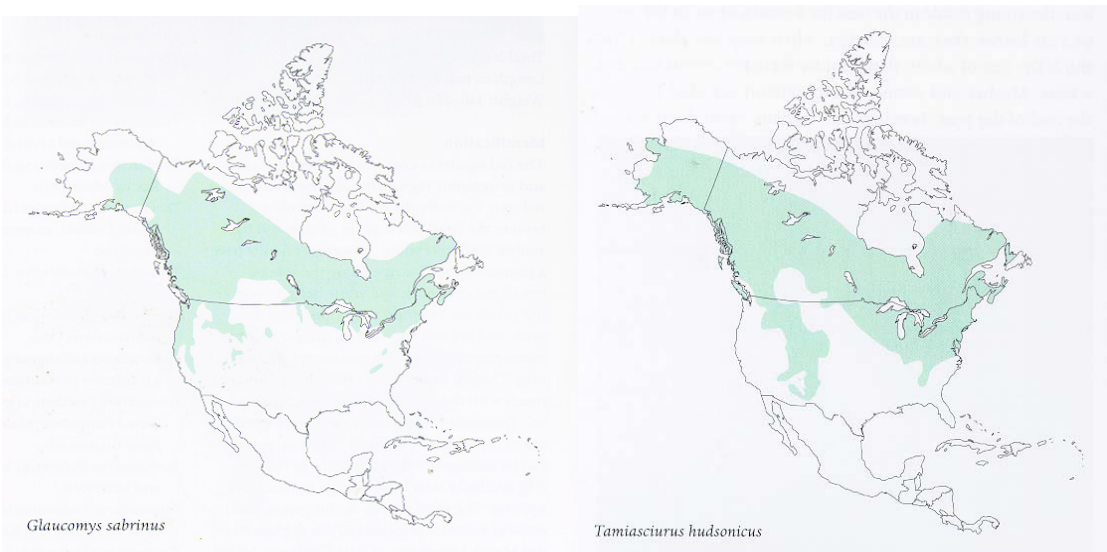

Figure 1.1. Distribution of a) northern flying squirrels (*Glaucomys sabrinus*) and b) red squirrels (*Tamiasciurus hudsonicus*) in North America as identified by Wilson and Ruff (1999).

(ASM), which are based on morphological and geographical data (Koprowski 2005). Currently, northern flying squirrels are distributed in the Black Hills of South Dakota and Wyoming (Wells-Gosling and Heaney 1984), while red squirrels are found in the Black Hills and in extreme northeastern South Dakota (Chapman and Feldhamer 1982, Kiesow

et al. 2007). Northern flying squirrels primarily use ponderosa pine (*Pinus ponderosa)* stands interspersed with quaking aspen (*Populus tremuloides*) and white spruce (*Picea glauca*) in the Black Hills (Krueger 2004), while red squirrels use primarily coniferous forests throughout their range (Kemp and Keith 1970, Rusch and Reeder 1978). Northern flying squirrels and red squirrels that reside in the Black Hills are isolated from other populations, with the nearest mountain range being the Bighorn Mountains 241 km to the northwest (Froiland 1978). Due to this isolation, these squirrel populations are likely disjunct from other populations.

Historically, it was unknown if the northern flying squirrel population in the Black Hills was genetically divergent, causing the classification and reclassification of this population as a separate species or subspecies. King (1951) detected differences in measurement data, in which northern flying squirrel specimens from the Black Hills had larger skulls, longer bodies, and darker fur than specimens from other parts of their range. As a result, the population of northern flying squirrels found in the Black Hills was reclassified from *G. s. canescens* to *G. s. bangsi*. Wells-Gosling and Heaney (1984) reported that, based on morphological data, the northern flying squirrel population in the Black Hills is a disjunct population and thus genetically isolated from other populations. Currently, northern flying squirrels in the Black Hills are classified as *Glaucomys sabrinus bangsi*, which includes other regions of the northern Rocky Mountains (Hall1981, Wells-Gosling and Heaney 1984; Figure 1.2).

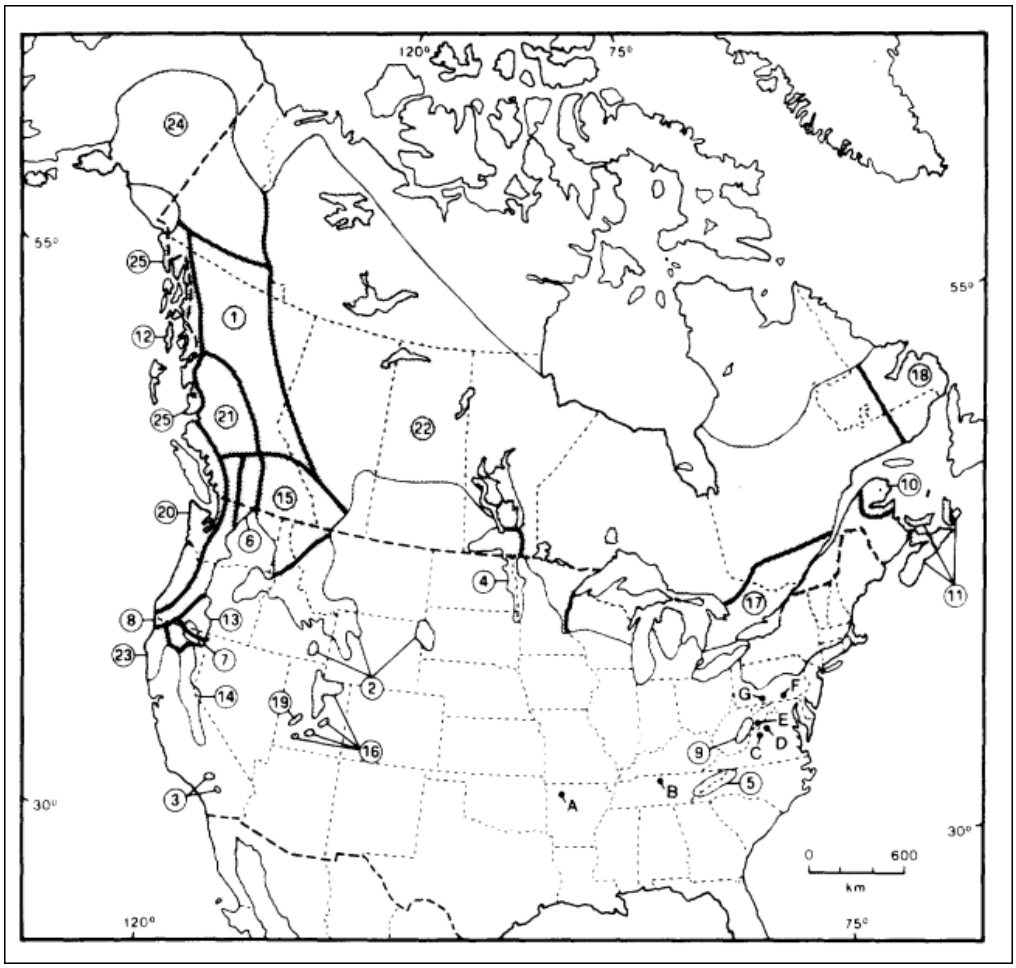

Figure 1.2. Northern flying squirrel subspecies as designated by Wells-Gosling and Heaney (1984), in which (2) represents *G. s. bangsi*.

Similarly, red squirrel subspecific designation is perplexing. Red squirrel populations within the Rocky Mountain region are proximate to each other, which suggests that subspecies designations would include clusters of nearby ranges. However, the Black Hills population is apparently disjunct (Jones et al. 1985) therefore South Dakota populations are designated as a separate subspecies, *Tamiasciurus hudsonicus dakotensis,* and considered endemic to this area (Hall 1959, Turner 1974, Steele 1998). This classification was based solely on darker hair color and longer, heavier body size

and does not take into account any molecular (DNA-based) data (Turner 1974; Figure 1.3).

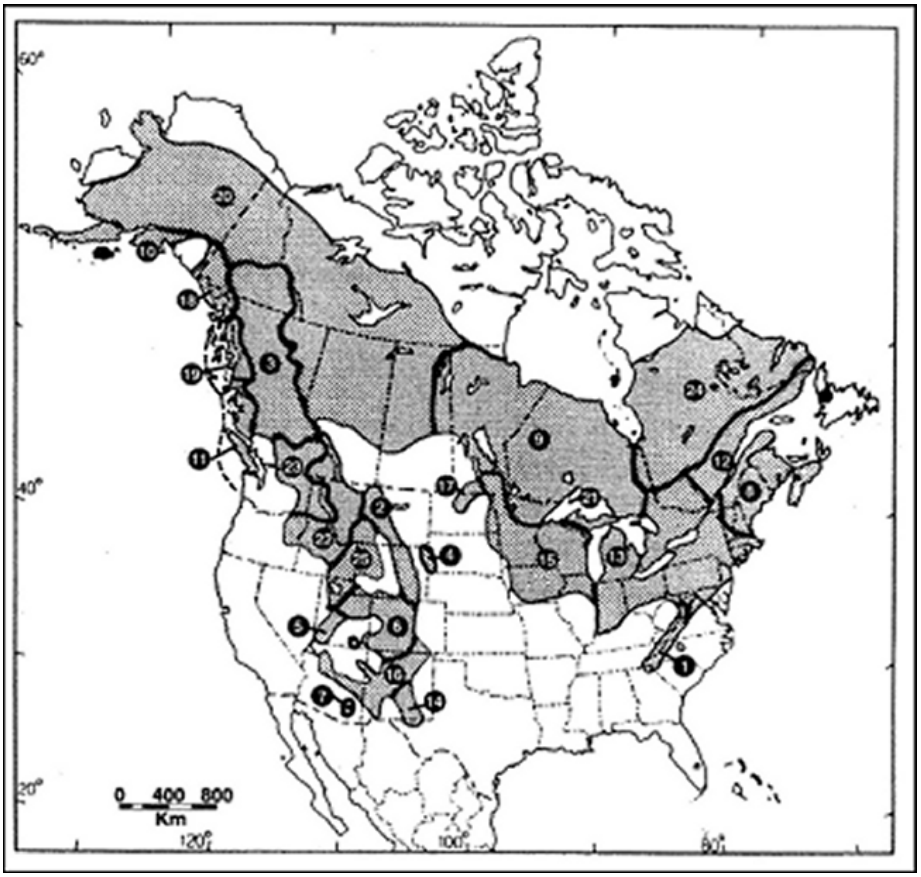

Figure 1.3. Red squirrel subspecies as designated by Steele (1998), in which (4) represents *T. h. dakotensis*.

Currently, the northern flying squirrel is classified, at the state level, as S2 (or imperiled because of rarity or other factors that may cause extinction) by the South Dakota Natural Heritage Program (SDNHP 2006) and is considered a Species of Local Concern by the USDA Forest Service (USDA 2005). As a result, northern flying squirrels in South Dakota are considered rare and thus monitored by biologists. The red squirrel, on the other hand, is not considered imperiled according to the SDNHP and USDA Forest Service. Regardless, both squirrel populations are small and probably

disjunct from other populations, thus further investigation in their genetic structure is deemed useful and may be necessary from a conservation perspective.

STUDY AREA

The Black Hills are unique geological formations with a continental climate and coniferous and prairie vegetation (Peterson 1974), disjunct from other boreal and montane biomes. Also know as "paha sapa" (or Hills that are Black) by the Lakota people, the Black Hills appear as a forested island surrounded by lowland grasslands (Froiland 1978). As such, many plant and animal species found in this region are unique and relict of past boreal and/or montane conditions, dating back to the late Pleistocene (~10,000 years ago).

Formation of the Black Hills

The Black Hills are one of the oldest formations in North America, and were formed into a dome as a result of a series of uplifts starting in the Pre-Cambrian Period and ending in the Pleistocene (Froiland 1978). These uplifts occurred as the central dome of the Black Hills was pushed up from beneath thereby exposing geological layers, in a pattern where the newest layers are seen on the outside and the oldest layers are seen in the center (Froiland 1978). More specifically, the timetable of events of the formation of the Black Hills is as follows (Froiland 1978):

Pre-Cambrian Period – A vast sea covered the area where the Black Hills currently is located. Sediments from the sea were deposited, caves were likely formed, and an uplift occurred but receded by the Cambrian Period.

Cambrian Period to Tertiary Period – Throughout this period of time, there was a series of uplifts and erosion cycles in concert with rising and falling seas that occurred in what was to become the Black Hills. New layers of sediments were deposited and some of the greatest mountain building occurred during the Cretaceous Period. During the Cretaceous Period, the Black Hills uplifted into its present elongated form and was the forerunner to the Laramide orogeny, which raised the Rocky Mountains.

Quaternary Period – The final uplift of the Black Hills occurred during the early Pleistocene, resulting in the present day geological layers and form.

In the late Pleistocene, several glaciers moved across northern North America. The Black Hills were not glaciated; rather they were surrounded by glaciers to the north, east, and west (Froiland 1978). To the north, the Continental ice sheet covered northern North Dakota and northern Montana. To the east, the Wisconsin ice sheet covered eastern South Dakota to the Missouri River. To the west, there is evidence of an ice sheet covering the Bighorn Mountains (Froiland 1978).

Glaciation caused the climate to change to cool, moist conditions, which resulted in the southward displacement of northern biota (Turner 1974). Coniferous forest (e.g.,

spruce [*Picea*] and pine [*Pinus*]) probably grew continuously in periglacial regions near the boundary of the ice sheet (Froiland 1978). Based on pollen and macrofossil records, *Picea* persisted during the last glacial period in a wide belt of the United States (Ritchie and MacDonald 1986). Peterson (1974) suggested that montane biota was present in the region during the full glacial period, whereas boreal elements may not have appeared in the Black Hills and other periglacial areas until the late glacial period in the late Pleistocene (~10,000 years ago). Thus, the current boreomontane character of the Black Hills likely became established late in the last glacial period, i.e., approximately 10,000 years ago (Turner 1974).

After the maximal advance of the Wisconsin glacial front, there was a series of retreats, re-advancements, and lack of movement (Turner 1974). Eventually, the climate became warmer and drier thereby causing the retreat of the Wisconsin ice sheet in the early Holocene (or late Pleistocene). As this occurred, there was a withdrawal of boreomontane elements from the Northern Great Plains. Frequent fires during this time also prevented boreal forests from persisting in areas outside the Black Hills (Turner 1974). More specifically, as the ice retreated, *Picea* moved north- and westward in response to the shift in climate and as a result of the northwest wind direction facilitating seed dispersal (Ritchie and MacDonald 1986). Thus, the boreal forest became displaced further northward where the climate was cool and moist, which likely increased the colonization of temperate species replacing boreal elements.

As the surrounding plains became colonized by prairie species more adapted to semi-arid conditions, the Black Hills was also colonized by some of these species. Boreomontane species likely became stranded in the Black Hills because it served as a

refugium (Turner 1974), and only the most tolerant species survived in small, isolated populations. Moreover, deciduous forests probably dispersed from the east into the Black Hills via the east-west river systems and associated valleys (Hoffman and Jones 1970) thereby making the Black Hills a mixture of coniferous and deciduous forests and prairie grasslands.

Topography, climate, and frequent fires likely contributed to the present physiognomy of the Northern Great Plains such that the boreal elements of the Black Hills are disjunct from contiguous boreal forests. The nearest boreal forest is 700 km to the north (Turner 1974). Thus, the retreat of the glacier caused many relict populations of boreal and montane species to remain in the Black Hills and other montane environments.

Description of the Black Hills

The Black Hills are the easternmost of the outer ranges of the Rocky Mountains. Ranges neighboring the Black Hills include the Bear Lodge Mountains a short distance to the northwest, the Laramie Mountains 322 km to the southwest, and the Bighorn Mountains 241 km to the northwest (Froiland 1978). The Black Hills are 201 km long and 64 to 50 km wide and are orientated in the northwest and southeast direction. Elevations average 1,220 m in the east and average 915 m in the west (Turner 1974). The highest elevation is 2,207 m – called *Harney Peak* – is the highest point east of the Rocky Mountains.

Five regions comprise the Black Hills that include, from the outside to inside, the 1) Hogback Ridge, 2) Red Valley, 3) Foothills, 4) Limestone Plateau, and 5) Central

Crystalline Area (Peterson 1974; Figure 1.4). The Limestone Plateau, Central Crystalline Area, and the peaks of the Bear Lodge Mountains form the so-called boreal cap of the Black Hills (Turner 1974).

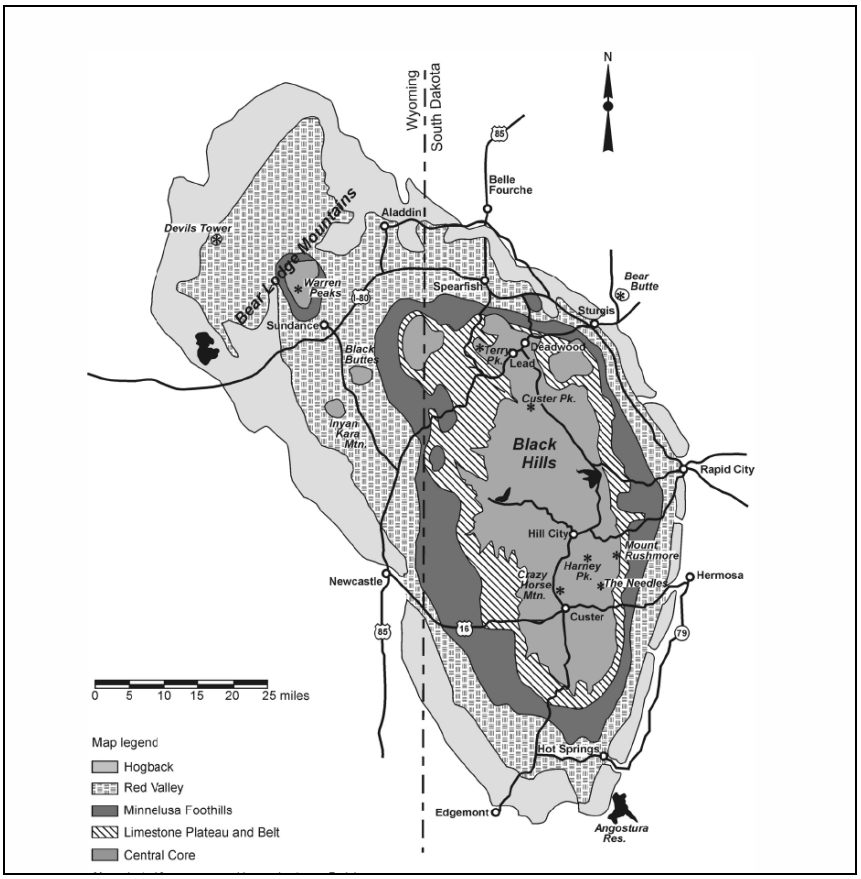

Figure 1.4. Five major geological regions of the Black Hills based on Larson and Johnson (1999) and Hough (2007).

Currently, the Black Hills climate is considered moister and less extreme than the surrounding plains. The climate in the Black Hills is a continental climate modified by a mountain climate (Froiland 1978). Chinook winds and sunny skies create cooler summers and warmer winters at higher elevations (Turner 1974). Summer temperatures average from 27ºC to 28ºC, while winter temperatures average from -13ºC to -10ºC. The

boreal cap, which is in the northern region, receives more rain (71 cm/yr.) than the southern region (40 cm/yr.; Turner 1974).

Soils in the Black Hills are unique to the region. Gray wooded soils with chernozems are found at higher regions (i.e., north and east), while chestnut soils and some azonal soil groups are found at lower elevations (i.e., south and west; Turner 1974). These unique soils give rise to a variety of plant species.

The vegetation in the Black Hills is considered a mixture of montane coniferous forests and prairie grasslands, being largely comprised of a montane belt of ponderosa pine (*Pinus ponderosa*; Peterson 1974). A subalpine belt of white spruce (*Picea glauca*) and plants with northern affinities can be found in more mesic areas, i.e., northern Black Hills. More specifically, the boreal cap (i.e., northern region) consists predominantly of coniferous forest with fauna of a boreomontane and/or cordillian (subalpine) origin (Turner 1974). Additional plants include Great Plains flora consisting of a mixture of grasses, forbs, and shrubs. These vegetative characteristics are remnant of the ancient boreal forest of the late Pleistocene, and 0.5% of the 1,260 vascular plants found in the Black Hills are likely endemic (McIntosh 1949).

There are also some species in the Black Hills dating back to the late Pleistocene, and some of these species are considered relicts and restricted to the Black Hills. Three of the six fish species found in the Black Hills are relict populations (Bailey and Allum 1962). As well, one species of the 226 bird species is an endemic to the Black Hills region (Mengel 1970). Lastly, 62 mammal species reside or did reside in the Black Hills, and these mammals have differentiated into distinct subspecies (Turner 1974). Moreover, several forested ecological islands were formed in the northern plains that

served as refugia, including the Black Hills, for Pleistocene relict species of trees, land snails, and small mammals (Wells and Stewart 1987).

Some more specific examples of relict species include smooth green snakes (*Liochlorophis vernalis*), willows (*Salix*), and mammals in the Black Hills. More specifically, Smith (1964) indicated that smooth green snakes have biogeographic affinities to the Black Hills. These snakes are restricted to the Black Hills with the nearest population in South Dakota found in the northeast corner of the state. Because smooth green snakes are dependent on moist, forested regions, they followed the boreal forest southward and remained in the Black Hills after the last glacial maximum (Smith 1964). Twenty species of willows originated in the Black Hills following the glacial maximum (Froiland 1978). Finally, Turner (1974) indicated that the highest densities of mammals, especially those with a boreomontane and cordillian origin, are found in the boreal cap region (in the northern Hills).

By these accounts, it seems northern flying squirrels and red squirrels likely followed suitable habitat during the late Pleistocene. These squirrels migrated to the Black Hills during this period, but they were isolated as the glacier receded and the climate warmed.

Study Sites in the Black Hills

We sampled the Black Hills (UTM 13N 574719 – 641489 E, 4809979 – 4932866 N) over a three year period (M. Hough unpublished data; Figure 1.5). Sites were designated “north”, “central”, and “south” based on the area and year sampled. Sites in the north region are in the northwestern Black Hills and were sampled in 2006. Sites in

the central region are in the west-central Black Hills and were sampled in 2007. Sites in the south region are in the southeast-central Black Hills and were sampled in 2005. Central and south are designated as such because of the lack of adequate continuous habitat (i.e., coniferous forest) in the southern Black Hills. In addition, topography (e.g., granite outcrops) and vegetation (e.g., grasslands) create potential dispersal barriers between the central (west-central) and south (southeast-central) sample sites (Froiland 1974). Thus, the southeast-central sample sites are designated as "south" for the duration of this study.

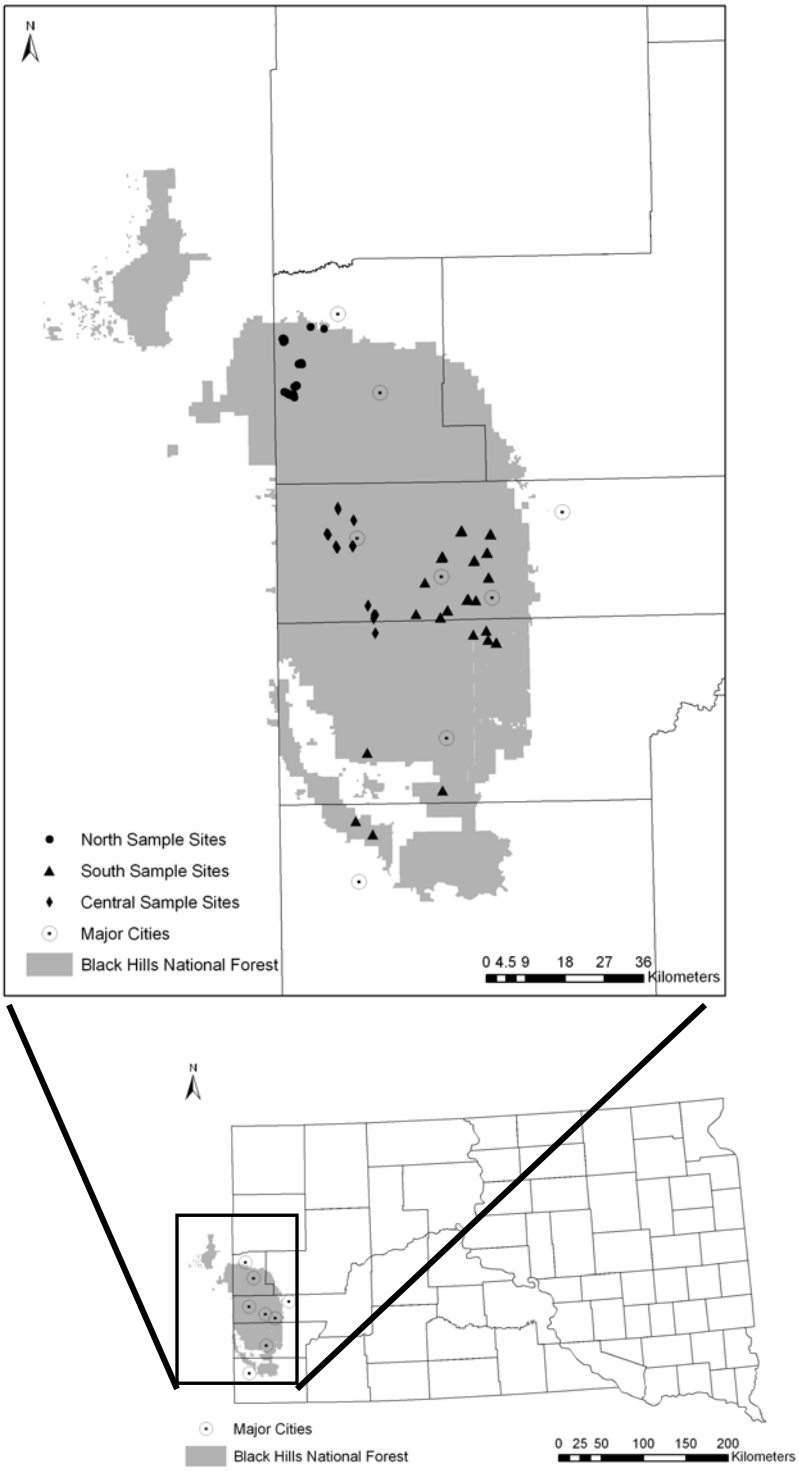

Figure 1.5. Sample sites in the Black Hills, which are separated into regions (north, central, south) based on year and area sampled.

GOALS OF THE STUDY

Genetic information may be crucial for correct classification of populations as different species or subspecies and management planning for conservation of species. Currently, there are no management plans for northern flying squirrels or red squirrels in South Dakota. Populations in South Dakota are isolated but seemingly stable, and may require management. Isolated populations are susceptible to decline, low heterozygosity, inbreeding, and low gene flow (Reed and Frankham 2003, Koprowski 2005), thus elucidating genetic patterns in the Black Hills will assist with establishing appropriate management objectives to maintain and/or conserve squirrel populations in the South Dakota.

Microsatellite and mitochondrial markers combined are extremely powerful for estimation of genetic variability, discrimination between subpopulations and subspecies, assessment of evolutionary relationship/genetic distance among populations, inference of relationships between captive and wild individuals, and for studying historical biogeography and migration patterns (Arbogast 1999). To this end, I set out to fulfill several objectives: 1) to determine the genetic variability and genetic distance between populations of *G. sabrinus* and *T. hudsonicus* in South Dakota compared to nearby populations of each respective species using mitochondrial DNA sequences and microsatellite markers, 2) to conduct parentage tests on *G. sabrinus* and *T. hudsonicus* populations in South Dakota using microsatellite markers, 3) to evaluate metapopulation dynamics of *G. sabrinus* and *T. hudsonicus* in the Black Hills, and 4) to determine interactions of *G. sabrinus* and *T. hudsonicus* in the Black Hills based on habitat use and food habits.

CHAPTER 2: CHARACTERIZATION AND ISOLATION OF FIVE ADDITIONAL MICROSATELLITE LOCI IN NORTHERN FLYING SQUIRRELS, *GLAUCOMYS SABRINUS* (SCIURIDAE, RODENTIA) FOR THE PURPOSES OF THIS RESEARCH

INTRODUCTION

Northern flying squirrels, *Glaucomys sabrinus*, are distributed in boreal forests of northern and northwestern North America (Wells-Gosling and Heaney 1984). Populations of northern flying squirrels found in the Black Hills of South Dakota and Wyoming are small and rare and considered disjunct from other populations within their range. As part of an ongoing project to understand parentage (Ch. 3), genetic structure (Ch. 4), and phylogeography (Ch. 5) of these disjunct populations, I developed a set of microsatellite primers to determine the genetic variability and structure of the Black Hills populations and their relatedness to nearby populations.

METHODS

Genomic DNA was extracted from muscle tissue of two individuals following manufacturer's protocols for the DNeasy blood and tissue extraction kit (QIAGEN). Tandem repeat regions were isolated using the subtractive hybridization method (Hamilton et al. 1999).

Digested DNA was enriched for seven oligonucleotide repeats $(CA)_{15}$, $(GT)_{15}$, $(CCT)_{10}$, $(AAT)_{10}$, $(GCG)_{10}$, $(GCA)_{10}$, and $(GCT)_{10}$. Enriched polymerase chain reaction (PCR) products were cloned using pBluescript II SK (+) and XL-1 MRF' Supercompetent cells (Stratagene). Colonies were screened using X-gal (5 -Bromo-4-

chloro-3-indolyl-beta-D-galactopyranoside) and IPTG (isopropyl-beta-D-thiogalactopyranoside) (Sigma-Aldrich). Approximately 500 color-positive (i.e., white) colonies were suspended separately in 100 μL T.E. buffer (10 mM Tris-HCl, pH 8.0; 0.1 mM EDTA, pH 8.0), and 2 μL of each colony solution was used to screen for microsatellite regions by hybridization with oligonucleotides (Glenn & Schable, unpubl.) and the Phototope detection system (New England Biolabs).

Subsequently, 50 positive clones were picked and further screened for insert size by PCR. Reactions were conducted in a 25 μL volume, which contained 1 μL of template DNA, 0.8 μM each of primers T3 and T7 (Integrated DNA Technologies), 1X ThermoPol Reaction Buffer (10 mM KCl; 10 mM $(NH_4)_2SO_4$; 20 mM Tris-HCl, pH 8.8; 2 mM $MgSO_4$; 0.1% Triton X-100; New England Biolabs), 200 μM of each dNTP, and 0.2 units of Vent-Exo DNA polymerase (New England Biolabs). The PCR protocol had an initial denaturing step at 96 °C for 5 min followed by 30 cycles of 96 °C for 45 s, 51 °C for 1 min, and 72 °C for 2 min. PCR products were run electrophoretically in a 1.5% agarose 1XTBE gel and visualized by SYBR® green and UV light.

Twenty clones that exhibited a single amplified band of 500-1000 base pairs were cleaned with 16 U of Exonuclease I and 3 U of Antarctic Phosphatase (New England Biolabs) followed by ethanol precipitation. Cleaned PCR products were sequenced using the T3 primer in DYEnamic ET Terminator Cycle Sequencing Kit (General Electric) $1/8^{th}$ volume reactions. Sequences were electrophoresed on an ABI Avant 3100 Genetic Analyzer.

Sequenced clones were edited and analyzed with DNAStar© Lasergene. Eighteen clones contained a repeat unit. Sequences with a 95% or greater homology were placed

in contigs to avoid primer design of paralogous sequences. Paralogous sequences were removed from further development. Eight sequences were used to design and test primers. Primer3 (http://frodo.wi.mit.edu/cgi-bin/primer3/primer3_www.cgi) was used to design eight primer pairs and IDT SciTools (http://www.idtdna.com/SciTools/SciTools.aspx) was used to estimate annealing temperatures and levels of self-priming. Amplification performance was optimized for each primer pair using a 48ºC to 64ºC annealing temperature gradient. Five primer pairs produced a reproducible, polymorphic product (Table 2.1).

Variation at the five loci was quantified using a sample of 79 northern flying squirrels from the Black Hills. One of the primers for each locus was labeled at the 5' end with one of three fluorescent dyes, 6-FAM, VIC, or PET (Applied Biosystems; Table 1). PCR was performed with 1.0 uL of genomic DNA, 0.5 uL of 10 uM forward primer, 0.5 uL of 10uM reverse primer, and 7.5 uL of 2X PCR Master Mix (Promega) in a total reaction volume of 15 uL. PCR started with an initial denaturing step at 95ºC for 4 min followed by 35 cycles of 95ºC for 45 s, annealing temperature (between 52.5ºC and 57.5ºC, Table 2.1) for 45 s, and 72ºC for 1 min 30 s and a final elongation step of 72ºC for 7 min.

Confirmation of PCR amplification was conducted by running a sample on a 1.5% agarose 1X TBE gel using SYBR® Green (Invitrogen) as a nucleic acid stain in each sample, and water blank was used to test for contamination of products. PCR products were diluted, multiplexed using all five primers per sample, and mixed with Hi-Di formamide and the LIZ 500 size standard before electrophoresis on an Avant 3100 genetic analyzer (Applied Biosystems). Because Zittlau et al. (2000) showed little

evidence of cross-species microsatellite amplification in flying squirrels, no cross-species amplification was conducted.

Alleles were scored using GeneMapper software (Applied Biosystems) and input into POPGENE (Yeh and Boyle 1997) for analysis of observed and expected heterozygosity and allelic variation. GENEPOP 1.2 (Raymond and Rousset 1995) was used to test for linkage disequilibrium, and MicroChecker (Oosterhout et al. 2004) was used to test for the presence of null alleles.

RESULTS AND DISCUSSION

For the five polymorphic loci, the number of alleles in 79 individuals ranged from two to eight (Table 2.1). Tests indicate that loci GLSA12 ($p = 0.0001$), GLSA48 ($p = 0.0088$), and GLSA 65 ($p = 0.0097$) are heterozygote deficient, indicating a high level of homozygosity in the Black Hills population. None of the loci show significant linkage disequilibrium ($P < 0.05$). However, two loci show evidence of null alleles: GLSA12 and GLSA48.

Table 2.1 Characterization of microsatellite loci in 79 samples of northern flying squirrel, *Glaucomys sabrinus*. Given for each locus are the annealing temperature (T_a), number of alleles observed (A), allelic size range (in base pairs [bp]), and observed heterozygosity (H_O) and expected heterozygosity (H_E). PET, VIC, and FAM refer to the fluorescent label used on each primer.

Loci	Repeat motif in clone (5' - 3')	Primer sequences (5' - 3')	T_a (°C)	n	A	Exp. allele size (bp)	Allele sizes (bp)	H_O	H_E	Acc. No.
GLSA 12	$(CA)_{15}$	F: **PET**-AGCATATGGAACCCCATATCAG R: GGCAAGATTTGTATCCTTGG	54.8	79	2	154	154 - 170	0.00	0.03	TBA
GLSA 22	$(GT)_5A(TG)_3TTT(GT)_5$	F: **VIC**-CCTGAAAATGATGCATGTGG R: AGAGTAGGCTGTTCCTTTGAGG	54.8	79	7	170	168 - 188	0.19	0.18	TBA
GLSA 48	$(CA)_{10}(CG)_6(CA)_6$	F: **PET**-CATCCATTTGCATCCTGGTA R: GAGTGGGCTCTCAGGTTGAC	52.5	79	8	306	304 - 320	0.47	0.64	TBA
GLSA 52	$(CA)_{16}$	F: **FAM**-TCCATCCACAGTGTGTGAGC R: CCTGGAGTCCACTCAAGCAT	57.5	79	6	252	210 - 254	0.61	0.52	TBA
GLSA 65	$(GT)_{17}$	F: **FAM**-TTTGGGAATTGAGGCTATGG R: TTCACAGTGACAGCAGGTGAC	52.5	79	6	188	170 - 210	0.22	0.23	TBA
		Mean			6			0.27	0.32	

Each new primer was used for further data analyses for within-population parentage testing and genetic structure and between population genetic differences. Samples were collected throughout the Black Hills and in nearby mountain ranges. Parentage testing indicated that relatedness among breeding pairs is roughly ~0.5, which indicates high inbreeding within the Black Hills population. However, the inbreeding rate for the overall population was low, 0.03. In addition, there appears to be no population substructuring in northern flying squirrels, but densities of northern flying squirrels are restricted to specific areas of the Black Hills, i.e., the north and central regions, with adequate tree cover. Locus GLSA12 has two alleles, which are restricted to two different regions in the Black Hills: the north-central region and the south-central region. The allele found at 170 bp is expressed in individuals from the north-central region, whereas the allele found at 154 bp is expressed in individuals form the south-central region. Moreover, the low level of heterozygosity shown at several loci is likely the result of the small, isolated northern flying squirrel population in the Black Hills. With the presence of null alleles at two loci and the low level of heterzygosity at several loci, the population of northern flying squirrels in the Black Hills may not be in Hardy-Weinberg equilibrium.

CHAPTER 3: PARENTAGE OF NORTHERN FLYING SQUIRREL (*GLAUCOMYS SABRINUS*) POPULATIONS IN THE BLACK HILLS

INTRODUCTION

Parentage testing is used for many applications, such as kinship analysis, estimating inbreeding, speciation, identifying breed registries, and wildlife forensic analysis (Budowle et al. 2005). It can help to understand genetic exchange at a finer level and combine genetic understanding with field data. In addition, parentage testing (i.e., paternity testing) is feasible and even profitable for domestic livestock operations (Gomez-Raya et al. 2008) and is used for human identity testing in DNA forensic studies (Butler 2006). In complicated breeding systems, such as polygyny and polyandry, it may be difficult to determine parentage from direct observations (Birkhead and Moller 1992, Cockburn 1998). Parentage can be accurately determined through molecular methods, i.e. DNA profiling.

Northern flying squirrel (*Glaucomys sabrinus*) populations are distributed in forested regions of northern North America and parts of the Appalachian and Rocky Mountains (Wells-Gosling and Heaney 1984, Hall 1981). Within their larger range, they are found in suitable habitat in the Black Hills of South Dakota and Wyoming. The Black Hills northern flying squirrel population is geographically isolated from other northern flying squirrel populations, with the nearest conspecific populations in western Wyoming. Due to this isolation, the Black Hills squirrel population is likely genetically distinct (Wells-Gosling and Heaney 1984).

Northern flying squirrels select drey or cavity nests in mature forests (Wells-Gosling and Heaney 1984, M. Hough unpublished data). Nests often contain aggregations of squirrels as an adaptation to cold temperatures (Layne and Raymond 1994). These aggregations are usually comprised of related adults and subadults (Layne and Raymond 1994), which likely breed when the season begins.

The breeding season often begins during the winter with the development of males' testes. In the late spring and summer, female pregnancy and lactation follow testes development (Vernes 2004). There is usually one breeding season per year, and males are often chosen by the female due to their proximity to females (Vernes 2004). Because nests contain aggregations of related squirrels, breeding pairs are probably comprised of relatives.

The isolation of the northern flying squirrel population in the Black Hills creates a unique opportunity to study family groups through parentage testing, due to little immigration and emigration in and out of the Black Hills as a whole. Accurate parentage analysis can address questions related to inbreeding avoidance and the benefits of mate choice (Richardson et al. 2001). Inbreeding avoidance can prevent reduced offspring fitness (Lane et al. 2007). Northern flying squirrels show high levels of mating between multiple mates with little to no bias toward mates, as do other sciurid species (Lane et al. 2007). Understanding the relatedness of potential mated pairs in the Black Hills can help us understand inbreeding and its potential effects to squirrel populations in an isolated region. I predict inbreeding rates will be high due to relatedness of mates. However, relatedness among parent pairs will not affect the subsistence of population. I examined the parentage of the northern flying squirrel population in the Black Hills using

microsatellite markers to better understand the dynamics of breeding in the Black Hills. By studying family groups through genetic parentage testing, I can examine the relatedness of mating pairs and elucidate which maternal-paternal pairs produced the most offspring in different regions throughout the Black Hills.

METHODS

Study Area, Sample Collection, and DNA Extractions

The Black Hills was chosen as a sample site for several reasons. The Black Hills are unique geological formations with many geological and topographical features, are isolated from nearby mountain ranges, and serve as home to many remnant species (Ch. 1). As a result, the Black Hills is an excellent study site for examining within-population genetic structure of an isolated population.

Sample sites, i.e., trap sites, were interspersed throughout the south, north, and central regions of the Black Hills from 2005 – 2007 (Figure 1.5, Ch. 1). Sites were selected based on previous sightings and suitable habitat. The south region was sampled from 9 May to 14 July 2005 and 11 – 18 August 2005, the north region was sampled from 10 May to 14 July 2006 and 15 – 25 August 2006, and the central region was sampled 10 May to 24 June 2007.

To collect samples, 20 Havahart® and/or Tomahawk© baited traps were placed in a line transect, with one trap per tree every 60 – 80 m. Bait included a mixture of peanut butter, bacon grease, and oatmeal. Traps were placed in trees in suitable habitat for up to 14 days and checked each morning during this period. Handling and capturing

techniques were approved by the South Dakota State University Animal Care and Use Board.

Each captured northern flying squirrel was weighed and classified as adult or juvenile. In addition, ear clippings were collected from captured individuals for genetic analysis. A total was 151 northern flying squirrel samples (i.e., ear clippings) collected from the Black Hills in the north, central, and south regions (Table 3.1, Ch. 1). DNA was extracted from ear clippings using the DNeasy blood and tissue extraction kit (QIAGEN), using the manufacturer's instructions.

Table 3.1. Number of northern flying squirrel samples collected from each region of the Black Hills.

Site	Number of Samples
North	93
Central	36
South	22
Total	151

Any trap mortalities were kept as vouchers specimens, stored in a -70ºC freezer, and used for stomach necropsies. These specimens were archived in the mammalian collection maintained at South Dakota State University.

Microsatellite Amplification

I used primers for 10 polymorphic microsatellite loci designed for northern flying squirrels. Five primers are described in previous publications: GS2, GS4, GS13 (Zittlau et al. 2000), FLS1, and FLS6 (Winterrowd et al. 2005), and five primers are newly developed: GLSA12, GLSA22, GLSA48, GLSA52, and GLSA65 (Kiesow et al. unpublished data, Ch. 2).

Loci specific to northern flying squirrels were amplified in 15 uL reactions containing 1.0 uL of (50ng) genomic DNA, 0.5 uL of 10 uM forward primer, 0.5 uL of 10uM reverse primer, and 7.5 uL of 2X PCR Master Mix (Promega). The polymerase chain reaction (PCR) protocol for primers FLS1 and FLS6 was as follows: an initial denaturing step of 94ºC for 3 min followed by 10 cycles of 94ºC for 40 s, 70ºC (-1ºC per cycle) for 50 s, and 72ºC for 30 s then followed by 38 cycles of 94ºC for 40 s, 60ºC for 50 s, and 72ºC for 30 s with a final elongation step of 72ºC for 5 min (Winterrowd et al. 2005). The PCR protocol for primers GS2, GS4, and GS13 was as follows: an initial denaturing step of 94ºC for 1 min followed by 3 cycles of 94ºC for 30 s, 54ºC for 20 s, and 72ºC for 5 s then followed by 33 cycles of 94ºC for 15 s, 54ºC for 20 s, and 72ºC for 1 s with a final elongation step of 72ºC for 30 s (Zittlau et al. 2000). The PCR protocol for primers GLSA12, GLSA22, GLSA48, GLSA52, and GLSA65 was as follows: an initial denaturing step of 95ºC for 4 min followed by 35 cycles of 95ºC for 45 s, annealing temperature (between 52.5ºC and 57.5ºC) for 45 s, and 72ºC for 1 min 30 s with a final elongation step of 72ºC for 7 min (Kiesow et al. unpublished data, Ch. 2).

All microsatellite loci were amplified on a MJ Research PTC-200 thermocycler or a Bio-Rad MJ Mini thermocycler. Confirmation of PCR amplification was conducted by running a sample on a 1.5% agarose gel using SYBR® Green (Invitrogen) as a nucleic acid stain. Samples were multiplexed with five loci per sample and electrophoresed on an ABI PRISM Avant-3100 genetic analyzer, in which Liz-500 was used as a size-standard (Applied Biosystems). Each forward primer was fluorescently-labeled with VIC (green), PET (red), or 6-FAM (blue) dye (Applied Biosystems). Sizing for alleles for

each locus was conducted using GeneMapper software (Applied Biosystems) and then transformed into a data matrix of all individuals and all loci.

Statistical Analysis

Descriptive statistics, such as number of alleles and observed and expected heterozygosity levels, were obtained using GENEPOP 1.2 (Raymond and Rousset 1995). Tests for Hardy-Weinberg equilibrium and linkage disequilibrium were also conducted with GENEPOP 1.2 (Raymond and Rousset 1995). Micro-Checker (Oosterhout et al. 2004) was used to test for the presence of null alleles. Lastly, I used BayesAss to calculate F-statistics (i.e., F_{IS}) within subpopulations (Wilson and Rannala 2003) and F-STAT (Goudet 1995) to calculate F_{IS} within the overall population (i.e., combined subpopulations). F-statistics are reported in a 0 to 1 scale.

Cervus 3.0.3 (Marshall et al. 1998) was used to determine log-likelihood of parentage (LOD score) for each candidate parent within the Black Hills per region (i.e., south, north, and central). Likelihood equations take genotypic typing error into account, in which an error is defined as the replacement of the true genotype with a genotype selected at random under Hardy-Weinberg assumptions. A simulation of likelihood-based parentage inference was conducted using allele frequencies from 10 microsatellite loci from 151 northern flying squirrels. Hardy-Weinberg equilibrium was taken into consideration by setting the minimum number of appropriately typed loci (i.e., those in HWE) to three during the simulation. During the parentage simulation for northern flying squirrels, I identified 50 candidate parents and assumed 75% of candidate parents were sampled, which were the program default values. The simulations determined the

proportion of parentage tests that could be resolved with 80% confidence and 95% confidence. Candidate parents were identified as any adult squirrel in the sampled population, with sexes considered unknown. Sexes were identified as unknown because not all individuals collected in the Black Hills had sex identified, i.e., data were missing on the sex of the individual. Parentage may be assigned with confidence if the LOD score is high, usually values above zero. Critical trio LOD scores, which were the scores of both parents and the assigned offspring, were used for analysis. High LOD scores provide evidence for parentage and low LOD scores provide evidence against parentage (Morrissey and Wilson 2005).

I used ML-RELATE to estimate the relatedness among the most common parent pairs (those with five or more pairings) using maximum likelihood (Kalinowski et al. 2006). Coefficient of relatedness (*r*) was calculated, where values near one indicated related individuals and values near zero indicated unrelated individuals (Kalinowski et al. 2006). I compared relatedness between each subpopulation using a Kruskal-Wallis test in JMP-IN® 4.0 (SAS Institute Inc., Cary, North Carolina).

RESULTS

The number of alleles per locus range from 2 to 13 in northern flying squirrels. Expected and observed heterozygosity vary across loci, and all loci are polymorphic (Tables 3.2, 3.3; Figure 3.1). Observed heterozygosity in each locus within each subpopulation did not vary much from the observed heterozygosity in the total population. However, in the central subpopulation one locus (GS4) has slightly lower observed heterozygosity and four loci (GLSA12, GLSA22, GLSA48, GLSA65) have

Table 3.2. Microsatellite loci, repeat motif, primer sequence, allele sizes, and number of alleles (A) for northern flying squirrels, as reported by Zittlau et al. (2000), Winterrowd et al. (2005), and Kiesow et al. unpublished data.

Locus	Repeat motif (5' - 3')	Primer sequence (5' - 3')	Allele sizes (bp)	A	H_O	H_E
GS2	(GT)16	F: **VIC**-AACATTCTCGCCACATCTAA R: CTACACCCCCAGCCCTACAA	230 - 258	2	0.64	0.49
GS4	(GT)15	F:**PET**-CTTCTTGAGTTGCTGGGGTGAC R: ATCTAAACCATAACACACACACA	132 - 184	11	0.55	0.64
GS13	(GT)16	F: **VIC**-CTGGTCTCTTGAGTTAGGTG R:TATTCCTTTCTTCTCTCCTCCC	80 - 132	4	0.04	0.03
FLS1	(AAAT)6	F: **NED**-CAACAAACTGCAACTGTATC R: CCACTTTGTCACCCTCCTTC	160 - 178	6	0.05	0.09
FLS6	(CTTT)19	F: **FAM**-TCGGACCTCTTGTTCGTCACC R: CGGAACCGGTACCCTTCGAC	142 - 188	13	0.81	0.82
GLSA12	$(CA)_{15}$	F: **PET**-AGCATATGGAACCCCATATCAG R: GGCAAGATTTGTATCCTTGG	154 - 170	3	0.06	0.09
GLSA22	$(GT)_5A(TG)_3TTT(GT)_5$	F: **VIC**-CCTGAAAATGATGCATGTGG R: AGAGTAGGCTGTTCCTTTGAGG	168 - 188	7	0.25	0.25
GLSA48	$(CA)_{10}(CG)_6(CA)_6$	F: **PET**-CATCCATTTGCATCCTGGTA R: GAGTGGGCTCTCAGGTTGAC	304 - 320	8	0.47	0.64
GLSA52	$(CA)_{16}$	F: **FAM**-TCCATCCACAGTGTGTGAGC R: CCTGGAGTCCACTCAAGCAT	210 - 254	9	0.64	0.56
GLSA65	$(GT)_{17}$	F: **FAM**-TTTGGGAATTGAGGCTATGG R: TTCACAGTGACAGCAGGTGAC	170 - 210	7	0.20	0.21
			Mean	7	0.37	0.38

Table 3.3. Observed and expected heterozygosity per subpopulation.						
	South		North		Central	
	H_O	H_E	H_O	H_E	H_O	H_E
GS2	0.50	0.72	0.48	0.52	0.51	0.95
GS4	0.71	0.82	0.64	0.56	0.13	0.14
GS13	0.00	0.00	0.01	0.01	0.17	0.18
FLS1	0.06	0.06	0.12	0.04	0.05	0.05
FLS6	0.80	0.76	0.83	0.80	0.82	0.95
GLSA12	0.00	0.00	0.09	0.05	0.22	0.24
GLSA22	0.19	0.21	0.21	0.20	0.45	0.52
GLSA48	0.68	0.63	0.58	0.39	0.87	0.67
GLSA52	0.67	0.74	0.47	0.54	0.67	0.86
GLSA65	0.16	0.17	0.12	0.13	0.59	0.52
Mean	**0.38**	**0.41**	**0.36**	**0.32**	**0.45**	**0.51**

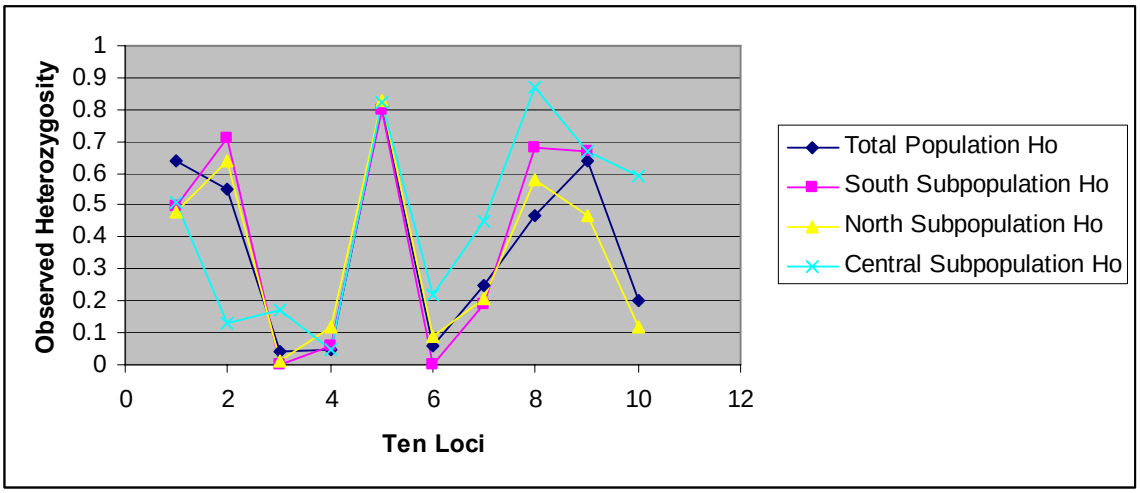

Figure 3.1. Observed heterozygosity in the total population, south subpopulation, north subpopulation, and central subpopulation, in which 1 = GS2, 2 = GS4, 3 = GS13, 4 = FLS1, 5 = FLS6, 6 = GLSA12, 7 = GLSA22, 8 = GLSA 48, 9 = GLSA 52, and 10 = GLSA 65.

slightly higher observed heterozygosity in comparison to the total population. In addition, certain alleles were restricted to certain subpopulations. At locus GLSA12, the allele at 154 bp was present in subpopulations from the southern and northern Black Hills whereas the allele at 170 bp was present only in the subpopulation from the central Black Hills. At locus GS13, the allele at 132 bp was present in subpopulations from the southern and northern Black Hills whereas alleles at 100 bp, 82 bp, and 80 bp were present in subpopulations from the central Black Hills. This may suggest that the north

and south regions may exchange more genes with each other than with the central region, and suggests further investigation is likely needed into whether substructure exists in the Black Hills population.

Inbreeding rates of each subpopulation are as follows: 0.10 for the southern subpopulation, 0.05 for the northern subpopulation, and 0.43 for the central subpopulation. Inbreeding is high for the central subpopulation. However, in the overall population (i.e., with all subpopulations combined) inbreeding is relatively low, 0.031. In 70% of the loci in the central subpopulation, observed heterozygosity is lower than expected heterozygosity, which is indicative of a high inbreeding estimate.

Probability tests for Hardy-Weinberg equilibrium indicated a significant departure from equilibrium in seven loci (FLS1, GS2, GS4, GS12, GS48, GS52, and GS65; $p < 0.05$) in the overall population. Departure from equilibrium is the result of heterozygote deficiencies. In addition, linkage disequilibrium was detected between four pairs of loci (GS4 and GS12, GS12 and GS22, GS12 and GS52, and GS22 and GS52; $p < 0.05$), or between 8% of all possible pairs between the loci. Linkage disequilibrium is present at low levels in populations (Hill and Robertson 1968).

Parentage analysis allowed us to assign maternity and paternity of offspring. I used all loci to calculate critical LOD values at the 80% and 95% confidence level. Critical trio LOD scores above one indicate true parent pairs and in some cases non-parent pairs. The distribution of assigned (above one) and excluded (one and below) parent pair assignments can be seen in Figure 3.2. There is no overlap between assigned and excluded parental pairs, suggesting that parent pair assignments are likely accurate (Richardson et al. 2001). A total was 29 true parent pairs (i.e., mother-father pairings)

assigned at the 80% confidence level for flying squirrels, but only five true parent pair assignments were made at the 95% confidence level, being that both parents and sexes were unknown. Patterns at the 80% confidence level are the same at the 95% confidence level (Marshall et al. 1998). Assignment of parent pairs at 80% confidence required a positive LOD, thus LOD values above one were assigned as parent pairs in which 82% of the individuals were assigned to a parent pair. However, more assignments were recognized at 80% confidence which may or may not accurately represent the population.

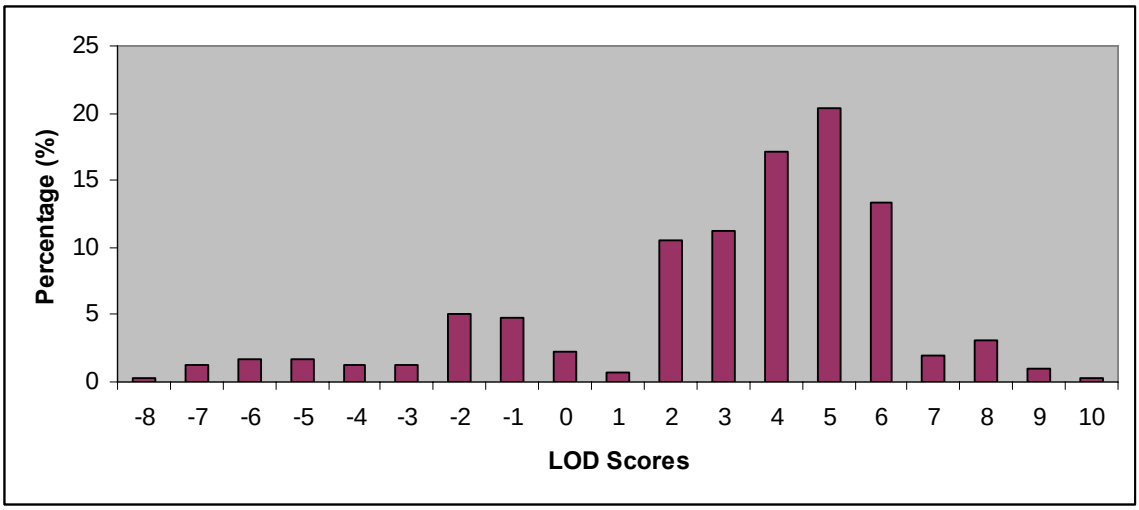

Figure 3.2. LOD scores for assigned (above one) and excluded (one and below) parent pairs.

Parent pairs with critical LOD scores eight or above were examined in more detail because LOD scores eight or above were identified as true parent pairs with the greatest statistical support (Figure 3.3, Table 3.4). In testing these parent pairs for relatedness, pair values differ per parent pair. Moreover, relatedness between subpopulations, although it appears to be different, is not statistically significant ($p > 0.05$). Of the pairs, 118BH-67BH and 53BH-78BH are most related, with a coefficient of relatedness of 0.50 and 0.54, respectively. Interestingly, parent pairs that are most related are located in the northern Black Hills, which suggests that more pairings between relatives occur in the

north maybe as a result of high squirrel densities in this region. It is difficult to predict whether polyandry or polygyny was shown because sexes were unknown (i.e. based on lack of data). However, several of the pairs show one parent in common, e.g., 11BH, 19BH, 22BH, 78BH, and 155BH, which suggests polyandry or polygyny is present in the population.

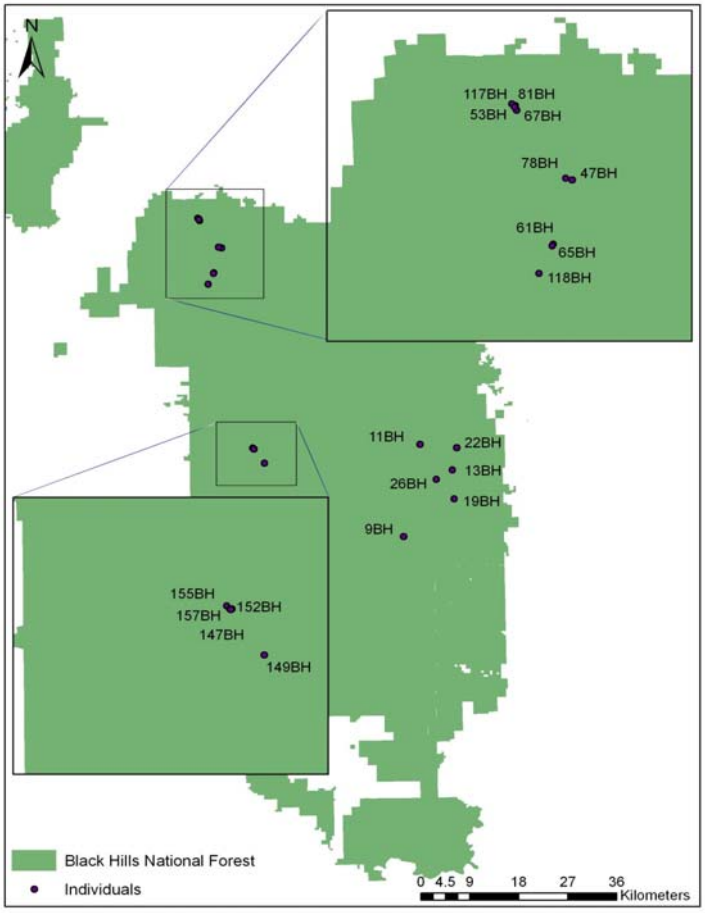

Figure 3.3. Common parent pairs with LOD scores eight or above as determined by parentage testing.

Table 3.4. Coefficient of relatedness of northern flying squirrel parent pairs. Bolded parents have multiple mates.

	Parent 1	Parent 2	Coefficient of Relatedness (*r*)
North	47BH	81BH	0.00
	118BH	67BH	**0.50**
	117BH	**78BH**	0.28
	53BH	**78BH**	**0.54**
	61BH	65BH	0.00
Central	**155BH**	157BH	0.29
	155BH	147BH	0.49
	149BH	152BH	0.31
South	**22BH**	26BH	0.00
	22BH	9BH	0.00
	22BH	**19BH**	0.11
	11BH	**19BH**	0.00
	11BH	13BH	0.00

DISCUSSION

Northern flying squirrels in the Black Hills show signs of isolation from other populations within their range in North America. Heterozygosity is low; low heterozygosity indicates an absence of genetic variation possibly due to lack of gene flow with other populations (Menken 1987). Several factors can contribute to low levels of heterozygosity, which include genetic drift, founder effect, inbreeding, biased sex ratio, and mating system (Platz and Grudzien 2003). In general, small populations of constant size lose heterozygosity over time, which can erode genetic variability (Platz and Grudzien 2003).

A population with allelic variation at all loci is considered to be in Hardy-Weinberg equilibrium (Platz and Grudzien 2003). Therefore, genotypes in subpopulations in the Black Hills do not adhere to Hardy-Weinberg expectations. A departure from Hardy-Weinberg equilibrium could be explained by non-amplifying (null alleles) rather than lack of lack of genetic variability.

As a comparison, small populations of European flint maize are found in central Europe. Populations deviated significantly from Hardy-Weinberg equilibrium in 46.7% of the markers, with an excess of homozygosity in 97% of the cases (Reif et al. 2005). Low heterozygosity levels may result from positive assortative mating between individuals (homogamy), artificial subgrouping of individuals within populations, and selection favoring homozygotes (Reif et al. 2005). However, there was no evidence for linkage disequilibrium among pairs of loci observed in the European population (Reif et al. 2005). Because of low heterozygosity but no evidence of disequilibrium, it is likely the Black Hills population is not operating as the European flint maize populations, meaning homogamy, subgrouping of individuals, and favoring homozygotes is likely not the reason for low heterozygosity.

From another perspective, Chinese shrimp (*Fenneropenaeus chinensis*) populations, also forming small populations, were examined at several loci, and six of the population loci showed a significant departure from Hardy-Weinberg equilibrium (Liu et al. 2006). However, genetic variation was greater within populations than between populations among these shrimp (Liu et al. 2006), which suggests within population gene flow but between population structure, much similar to that shown in the Black Hills (Ch. 4, 5)

Small populations tend to show a departure from Hardy-Weinberg equilibrium, as evidenced by the studies mentioned (i.e., European flint maize, Chinese shrimp, and the Black Hills northern flying squirrel). This is a result of lack of within-population genetic variability. Excess of homozygosity often captures a departure from equilibrium and can measure disequilibrium (Sabatti and Risch 2002), thus it is expected that if a population

is relatively homozygous, there will likely be a departure from Hardy-Weinberg equilibrium and some degree of linkage disequilibrium.

Excess of homozygosity in the Black Hills can likely be explained by founder events that occurred in the Black Hills northern flying squirrel during the late Pleistocene. The late Pleistocene marks the last major glaciation event, which occurred nearly 10,000 years ago. As glaciers surrounded the Black Hills, which is an uplifted dome, the boreal forest was able to colonize the Black Hills. When the boreal forests stretched south to the Black Hills, a small population of northern flying squirrels was likely founded from in the Black Hills by a few individuals. As the glaciers receded, a small population of squirrels remained in the Black Hills but was isolated from nearby conspecifics. As a result, heterozygosity levels were affected. The Black Hills population of northern flying squirrel is small and disjunct from nearby populations (Ch. 5), which likely explains the lack of within-population genetic variability.

The relatively low genetic variability meant that it was impossible to directly resolve the parentage of northern flying squirrels without using information related to the ecology of the species in conjunction with the parental assignment procedure. Thus, I assumed the closest relationship was first order and parent pairs were assigned per subpopulation, in which mother-father pairs were established within subpopulations (i.e., north, south, central regions). Furthermore, because sexes were designated as unknown, resolving the true parentage of these subpopulations presents further difficulty. However, twenty-nine parent pairs were assigned with a high confidence. Assigned parent pairs are restricted to areas where they are found in high densities within their subpopulation, maybe where nesting aggregations are formed. The majority of nests occupied by flying

squirrels contain aggregations of squirrels with greater than two adults and/or subadults per nest (Layne and Raymond 1994). Observations in the Black Hills also suggested northern flying squirrels formed aggregations (M. Hough pers. comm.). Mixed-age aggregations were most common with slightly more males and subadults present. Sixteen percent of aggregations in Florida contained known relatives, which were often females and their offspring (Layne and Raymond 1994). Thus, nesting aggregations may lead to increased opportunities to breed with relatives or multiple mates, as that shown in the Black Hills northern flying squirrel.

Nesting aggregations suggest that a parent may mate with multiple mates or parent pairs are related. Parentage tests suggest that some parents had multiple mates (e.g., 11BH-19BH, 11BH-13BH), which suggests that either polyandry or polygyny (depending on the sex) occurs within each subpopulation. Moreover, some parent pairs appear to be related according to low heterozygosities and high relatedness, indicating that cousins or parent-offspring are breeding together. Family groups (i.e., squirrel aggregations) in southern flying squirrels consist of first order relatives, such as parents-offspring or full siblings (Winterrowd et al. 2005). However, the majority of adult nest mates that breed is low suggesting that adult mates are relatively unrelated (Winterrowd et al. 2005), unlike that found in northern flying squirrels in areas of the Black Hills.

Breeding between related individuals increases inbreeding and thus its effects on the population. Inbreeding may result from the restricted dispersal of individuals due to heterogeneous habitat or nesting aggregations due to winter temperatures. Biparental inbreeding and genetic structure can affect the range of gene dispersal and seed reproductive success in species (Ishihama et al. 2005). For example, *Macrosiphoniella*

tanacetaria is a specialist herbivore of tansy (*Tanacetum vulgare*) and is restricted to plant shoots therefore dispersal is likely to occur over a small spatial scale (Massonnet and Weisser 2004). Populations show high allelic variation and frequent deviations from Hardy–Weinberg and linkage disequilibrium (Massonnet and Weisser 2004), much like the northern flying squirrel in the Black Hills. Restricted movements and genetic characteristics may indicate inbreeding. However, when using microsatellites, a deficit of heterozygotes may be due to non-amplifying alleles (null alleles). Four loci specific to northern flying squirrels probably had null alleles, which could cause the high levels of heterozygosity in the Black Hills population. Null alleles are often shown in populations with a large effective population size with high mutation rates in flanking regions, which have diverged from the population in which alleles were designed (Chapuis and Estoup 2007).

Even though the Black Hills population shows low heterozygosity and breeding pairs comprised of relatives, inbreeding rates are relatively low throughout the Black Hills, with the exception of the central subpopulation. However, specific alleles are present in different regions, indicating that there may be some degree of genetic structure, albeit low. This regionalized allelic distribution may indicate that breeding pairs are restricted to certain regions of the Black Hills, preventing gene flow. Genetic variation is important in evolution, since is provides raw material for selection in environmental adaptation (Menken 1987). Without genetic variation, populations are less likely to adapt to changing environmental conditions.

CHAPTER 4: GENETIC STRUCTURE AND LANDSCAPE GENETICS OF NORTHERN FLYING SQUIRRELS (*GLAUCOMYS SABRINUS*) POPULATIONS FROM THE BLACK HILLS

INTRODUCTION

Understanding gene flow is important in conservation genetics because gene flow can be used to look into fine-scale genetic structure (e.g., inbreeding), dispersal of individuals, and overall genetic structure as it compares to geographic characteristics (Ishihama et al. 2005). Mammalian populations that are strongly substructured are either separated by barriers (e.g., topographic or vegetative) or belong to terrestrial species with low dispersal abilities (Miller-Butterworth et al. 2003). To examine population substructure in a terrestrial species, I selected a unique and isolated land formation – called the Black Hills – and a species, i.e., the northern flying squirrel, presumably found throughout this region.

The Black Hills are some of the oldest formations in North America that were formed as a result of a series of uplifts starting in the Pre-Cambrian Period and ending in the Pleistocene (Froiland 1978). These uplifts occurred as the central dome of the Black Hills was pushed up from beneath thereby exposing geological layers, in a pattern where the newest layers are seen on the outside and the oldest layers are seen in the center (Froiland 1978, Ch. 1). These geological layers affect the patterning of vegetation in the Black Hills.

The Black Hills flora are a mixture of coniferous (e.g., ponderosa pine) and deciduous (e.g., aspen and birch) forests and grassland vegetation (Ch. 1). As a result of

soil characteristics, high amounts of precipitation, and cool temperatures, the northern Black Hills are comprised of a combination of deciduous and coniferous forests, the central Black Hills are transitional (having characteristics similar to the northern and southern Black Hills), and the southern Black Hills are primarily coniferous forests (Ch. 1). In the Black Hills, northern flying squirrels are found in mesic areas with a mixture of aspen, oak, and pine forests and an abundance of den sites (i.e., snags) (M. Hough pers. comm.).

Currently, northern flying squirrels (*Glaucomys sabrinus*) are distributed throughout northern North America and parts of the Appalachian and Rocky Mountains (Hall 1981), including the Black Hills (Wells-Gosling and Heaney 1984, Jones et al 1985). Wells-Gosling and Heaney (1984) reported that the northern flying squirrel population in the Black Hills is a disjunct population, which is likely due to the isolation of this population from nearby populations as a result of glaciation events in the late Pleistocene (~10,000 years ago). Thus, it is likely this population is isolated from conspecifics, making it an ideal population to study the genetic structure of a terrestrial species.

Flying squirrel populations are dispersed in suitable throughout the Black Hills. Due to the heterogeneity of the vegetative habitat in the Black Hills, northern flying squirrels are found in higher densities in the northern and central Black Hills, where habitat is more suitable. There are potential barriers to gene flow between subpopulations within the Black Hills, which may cause genetic substructuring of the population into the three regions (north, central, and south). For example, the east-central portion of the Black Hills is composed of exposed granite and the central region contains

large areas of continuous grasslands, which causes geological and vegetative barriers to gene flow. Subpopulations are likely restricted to different regions of the Black Hills and may be comprised of related individuals. I used microsatellite markers to examine the overall genetic structure of northern flying squirrels in the Black Hills and whether geographical barriers and patterns of migration may impact their population structure.

METHODS

Study Area, Sample Collection, and DNA Extractions

The Black Hills was chosen as a sample site for several reasons. The Black Hills are unique geological formations with many geological and topographical features, are isolated from nearby mountain ranges, and serve as home to many remnant species (Ch. 1). As a result, the Black Hills is an excellent study site for examining within-population genetic structure of an isolated population.

Sample sites, i.e., trap sites, were interspersed throughout the south, north, and central regions of the Black Hills from 2005 – 2007 (Figure 1.5, Ch. 1). Sites were selected based on previous sightings and suitable habitat. The south region was sampled from 9 May to 14 July 2005 and 11 – 18 August 2005, the north region was sampled from 10 May to 14 July 2006 and 15 – 25 August 2006, and the central region was sampled 10 May to 24 June 2007.

To collect samples, 20 Havahart® and/or Tomahawk© baited traps were placed in a line transect, with one trap per tree every 60 – 80 m. Bait included a mixture of peanut butter, bacon grease, and oatmeal. Traps were placed in trees in suitable habitat for up to 14 days and checked each morning during this period. Handling and capturing

techniques were approved by the South Dakota State University Animal Care and Use Board.

Each captured northern flying squirrel was weighed and classified as adult or juvenile. In addition, ear clippings were collected from captured individuals for genetic analysis. A total was 151 northern flying squirrel samples (i.e., ear clippings) collected from the Black Hills in the north, central, and south regions (Table 4.1, Ch. 1). DNA was extracted from ear clippings using the DNeasy blood and tissue extraction kit (QIAGEN), using the manufacturer's instructions.

Table 4.1. Number of northern flying squirrel samples collected from each region of the Black Hills with information (i.e., alleles. % polymorphic loci, and observed heterozygosity [H_O] and expected heterozygosity [H_E]) regarding fitness of each subpopulation.

Site	Number of Samples	Mean No. of Alleles	% of Polymorphic Loci	H_O, H_E
North	93	4.3	100%	0.36, 0.32
Central	36	4.3	100%	0.45, 0.51
South	22	3.8	80%	0.38, 0.41
Total	151	4.1	93%	0.37, 0.38

Any trap mortalities were kept as vouchers specimens, stored in a -70ºC freezer, and used for stomach necropsies. These specimens were archived in the mammalian collection maintained at South Dakota State University.

Microsatellite Amplification

I used primers for 10 polymorphic microsatellite loci designed for northern flying squirrels (Table 4.2). Five primers are described in previous publications: GS2, GS4, GS13 (Zittlau et al. 2000), FLS1, and FLS6 (Winterrowd et al. 2005), and five primers are newly developed: GLSA12, GLSA22, GLSA48, GLSA52, and GLSA65 (Kiesow et al. unpublished data, Ch. 2).

Table 4.2. Microsatellite loci, repeat motif, primer sequence, allele sizes, and number of alleles (A) for northern flying squirrels, as reported by Zittlau et al. (2000), Winterrowd et al. (2005), and Kiesow et al. unpublished data.

Locus	Repeat motif (5' - 3')	Primer sequence (5' - 3')	Allele sizes (bp)	A	H_O	H_E
GS2	(GT)16	F: **VIC**-AACATTCTCGCCACATCTAA R: CTACACCCCCAGCCCTACAA	230 - 258	2	0.64	0.49
GS4	(GT)15	F:**PET**-CTTCTTGAGTTGCTGGGGTGAC R: ATCTAAACCATAACACACACACA	132 - 184	11	0.55	0.64
GS13	(GT)16	F: **VIC**-CTGGTCTCTTGAGTTAGGTG R:TATTCCTTTCTTCTCTCCTCCC	80 - 132	4	0.04	0.03
FLS1	(AAAT)6	F: **NED**-CAACAAACTGCAACTGTATC R: CCACTTTGTCACCCTCCTTC	160 - 178	6	0.05	0.09
FLS6	(CTTT)19	F: **FAM**-TCGGACCTCTTGTTCGTCACC R: CGGAACCGGTACCCTTCGAC	142 - 188	13	0.81	0.82
GLSA12	$(CA)_{15}$	F: **PET**-AGCATATGGAACCCCATATCAG R: GGCAAGATTTGTATCCTTGG	154 - 170	3	0.06	0.09
GLSA22	$(GT)_5A(TG)_3TTT(GT)_5$	F: **VIC**-CCTGAAAATGATGCATGTGG R: AGAGTAGGCTGTTCCTTTGAGG	168 - 188	7	0.25	0.25
GLSA48	$(CA)_{10}(CG)_6(CA)_6$	F: **PET**-CATCCATTTGCATCCTGGTA R: GAGTGGGCTCTCAGGTTGAC	304 - 320	8	0.47	0.64
GLSA52	$(CA)_{16}$	F: **FAM**-TCCATCCACAGTGTGTGAGC R: CCTGGAGTCCACTCAAGCAT	210 - 254	9	0.64	0.56
GLSA65	$(GT)_{17}$	F: **FAM**-TTTGGGAATTGAGGCTATGG R: TTCACAGTGACAGCAGGTGAC	170 - 210	7	0.20	0.21
			Mean	7	0.37	0.38

Loci specific to northern flying squirrels were amplified in 15 uL reactions containing 1.0 uL of (50ng) genomic DNA, 0.5 uL of 10 uM forward primer, 0.5 uL of 10uM reverse primer, and 7.5 uL of 2X PCR Master Mix (Promega). The polymerase chain reaction (PCR) protocol for primers FLS1 and FLS6 was as follows: an initial denaturing step of 94ºC for 3 min followed by 10 cycles of 94ºC for 40 s, 70ºC (-1ºC per cycle) for 50 s, and 72ºC for 30 s then followed by 38 cycles of 94ºC for 40 s, 60ºC for 50 s, and 72ºC for 30 s with a final elongation step of 72ºC for 5 min (Winterrowd et al. 2005). The PCR protocol for primers GS2, GS4, and GS13 was as follows: an initial denaturing step of 94ºC for 1 min followed by 3 cycles of 94ºC for 30 s, 54ºC for 20 s, and 72ºC for 5 s then followed by 33 cycles of 94ºC for 15 s, 54ºC for 20 s, and 72ºC for 1 s with a final elongation step of 72ºC for 30 s (Zittlau et al. 2000). The PCR protocol for primers GLSA12, GLSA22, GLSA48, GLSA52, and GLSA65 was as follows: an initial denaturing step of 95ºC for 4 min followed by 35 cycles of 95ºC for 45 s, annealing temperature (between 52.5ºC and 57.5ºC) for 45 s, and 72ºC for 1 min 30 s with a final elongation step of 72ºC for 7 min (Kiesow et al. unpublished data, Ch. 2).

All microsatellite loci were amplified on a MJ Research PTC-200 thermocycler or a Bio-Rad MJ Mini thermocycler. Confirmation of PCR amplification was conducted by running a sample on a 1.5% agarose gel using SYBR® Green (Invitrogen) as a nucleic acid stain. Samples were multiplexed with five loci per sample and electrophoresed on an ABI PRISM Avant-3100 genetic analyzer, in which Liz-500 was used as a size-standard (Applied Biosystems). Each forward primer was fluorescently-labeled with VIC (green), PET (red), or 6-FAM (blue) dye (Applied Biosystems). Sizing for alleles for

each locus was conducted using GeneMapper software (Applied Biosystems) and then transformed into a data matrix of all individuals and all loci.

Statistical Analysis

Substructure of Black Hills populations was examined using the Bayesian cluster approach implemented in the software STRUCTURE 2.0 (Pritchard et al. 2000). A Markov chain Monte Carlo (MCMC) algorithm was used where individual genotypes were assigned to a predefined number of clusters. Three runs were performed at each value of the fixed parameter K (clusters or subpopulations), from $K = 1$ TO $K = 5$, to determine which value of K is the best estimate. Each run consisted of 100,000 replicates after a burn-in of 10,000 replicates, used the admixture model, and allowed the allele frequencies to be correlated among subpopulations. The highest mean likelihood was used as an estimate of K. Once the most likely number of subpopulations (or K) was determined, individuals were assigned to subpopulations by performing one longer run (100,000 burn-in and 500,000 replicates) at the inferred K to obtain better q value estimates. Alpha (α) values were used to imply structure or admixture. Small alpha values (i.e., < 1) imply that individuals are essentially from one population or another (Pritchard et al. 2000). Values of q, the proportion of an individual's sampled genome characteristic of each subpopulation, were used to assign individuals to subpopulations. Individuals were unambiguously assigned to a single subpopulation when q values were greater than 0.5, as suggested by previous studies (Latch et al. 2008).

Population structure, i.e., subpopulations, can be detected using GENELAND (Guillot et al. 2005), which uses individual multilocus genetic data, such as microsatellite

loci. This program can also delineate spatial domains of populations to assist in estimating population membership. As a result, genotypic (loci) and geographic (UTM coordinates) data were input into GENELAND to detect population structure and spatial relationships. Panmictic and isolation by distance (IBD) simulations were also conducted to examine spatial relationships among subpopulations. During the simulations, three populations and nuclei in tessellation were designated.

Principal component analysis (PCA) was used to analyze geographic patterns among subpopulations. I used PCAGEN (J. Goudet) to perform PCA using 10 loci. PCA is a method used to describe patterns among populations in multidimensional space in which axes (in this space) are sequentially aligned in the greatest direction of variance and covariance among loci (Morrison 1990). PCA can be used to generate hypotheses about population structure.

Arlequin 3.11 (Schneider et al. 2000) was used to quantify hierarchical patterns of genetic structure among subpopulations in the Black Hills. Data were organized such that individuals were incorporated into subpopulations (i.e., north, south, central) based on collection sites and subpopulations were grouped into the total population. Analyses of data included AMOVA (analysis of molecular variance), F-statistics (i.e., F_{ST}), Hardy-Weinberg equilibrium, and linkage disequilibrium. Statistical differences between sites were tested using F_{ST}, and the proportion of the structure was assessed with AMOVA. In addition, I used BayesAss to calculate F-statistics (i.e., F_{IS}) within subpopulations (Wilson and Rannala 2003) and F-STAT (Goudet 1995) to calculate F_{IS} within the overall population (i.e., combined subpopulations). F-statistics are reported in a 0 to 1 scale.

Isolation by distance analysis was conducted using GENEPOP 1.2 based on sample sites (Raymond and Rousset 1995). Pairwise distances (F_{ST}) between sampled sites from AMOVA were converted to $F_{ST}/(1-F_{ST})$ values and compared to the ln (distance) of the UTM location per sample site. The variation of $F_{ST}/(1-F_{ST})$ with distance contains the most easily interpretable information (Rousett 1997). Euclidean distances were calculated in kilometers between UTM locations. Mantel tests were performed with converted F_{ST} distance and Euclidean distance matrices with 1,000 permutations to test for significance.

I used MIGRATE 2.0 (Beerli and Felsenstein 2001) to calculate effective population size with mutation rate (θ) and migration rates (M) of each squirrel subpopulation using maximum likelihood estimates. MIGRATE uses a MCMC approach to use genotype frequencies and obtain migration estimates (Beerli 2006). The parameters used for the estimates were: 10 short chains and 10,000 sampled geneologies, 3 long chains and 100,000 sampled geneologies, with a burn-in of 10,000 and an increment of 20, which were program default values and recommended for runs. Values of θ are constant for each population but vary across subpopulations, and mutation rates are constant for all loci. I also used BayesAss to calculate migration rates and F-statistics (i.e., F_{IS}) within subpopulations (Wilson and Rannala 2003). BayesAss also uses a MCMC approach but uses allelic frequencies to obtain migration estimates. Parameters were as follows: number of iterations was 3,000,000, of which 999,999 are burn-in, and the sampling frequency was 2,000, again, which were program default values. Estimates of migration from MIGRATE are interpreted as migration over several generations (~1,000

or more years), whereas BayesAss migration rates are interpreted as very recent gene flow between populations.

RESULTS

Population substructuring is most probable when $K = 3$, based on likelihood and alpha values (Table 4.3). This indicates that there may be three subpopulations in the Black Hills. However, there appears to be little to no structure between all three subpopulations in northern flying squirrels, as indicated by the relatively equal probability of assignment of individuals to each other (Figure 4.1, Table 4.4). In addition, alpha at $K = 3$ is relatively high, 2.9. Also note that alpha at $K = 2$, 3.1, is very similar that at $K = 3$ (Table 4.3). A high alpha suggests that there likely is no structure and rather one population exchanging genes throughout (Pritchard et al. 2000). Population assignment based on q values indicates that the central subpopulation may be separated from the north and south subpopulations. However, the north and south subpopulations may actually be one continuous subpopulation based on the relatively equal proportion of individuals assigned to each subpopulation. However, the small number of samples from south may be result of incorrect assignments in the south subpopulation. More individuals are concentrated in the north and central regions versus the south region, probably because habitat in the northern and central regions is more conducive to the survival of flying squirrels.

Table 4.3. Likelihood and alpha values from STRUCTURE analysis. Bolded is the most likely *K*.

K	ln	alpha
1	-2155	na
2	-2109	3.1
3	**-2086**	**2.9**
4	-2106	5.4
5	-2105	4.8

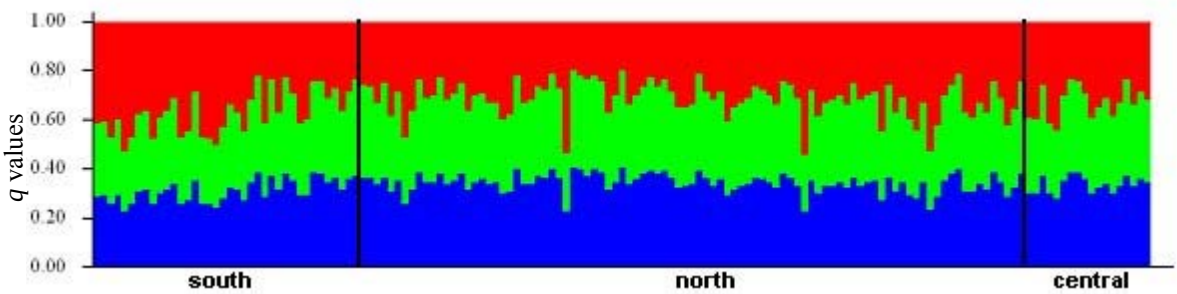

Figure 4.1. Northern flying squirrel subpopulation structure from the Black Hills, in which the three colors represent the clusters.

Table 4.4. Population assignment of northern flying squirrels, in which 1, 2, and 3 represent clusters (or subpopulations), as estimated by STRUCTURE. Bolded are the best assignment per cluster.

	1	**2**	**3**
south	15 (42%)	5 (14%)	**16 (44%)**
north	21 (23%)	**40 (43%)**	32 (34%)
central	**19 (86%)**	3 (14%)	0 (0%)

GENELAND estimated between 3 and 8 subpopulations in the northern flying squirrel population, with 3 subpopulations having the highest proportion in Hardy-Weinberg equilibrium (~0.60). The probability that a sample belongs to a particular subpopulation ranges from 30 to 45%, according to spatial distributions of multilocus genotypes, which suggests geographical boundaries impede genetic exchange (Figure 4.2). Moreover, the central subpopulation (≥ 40%) has a higher probability of assignment than the north and south subpopulations.

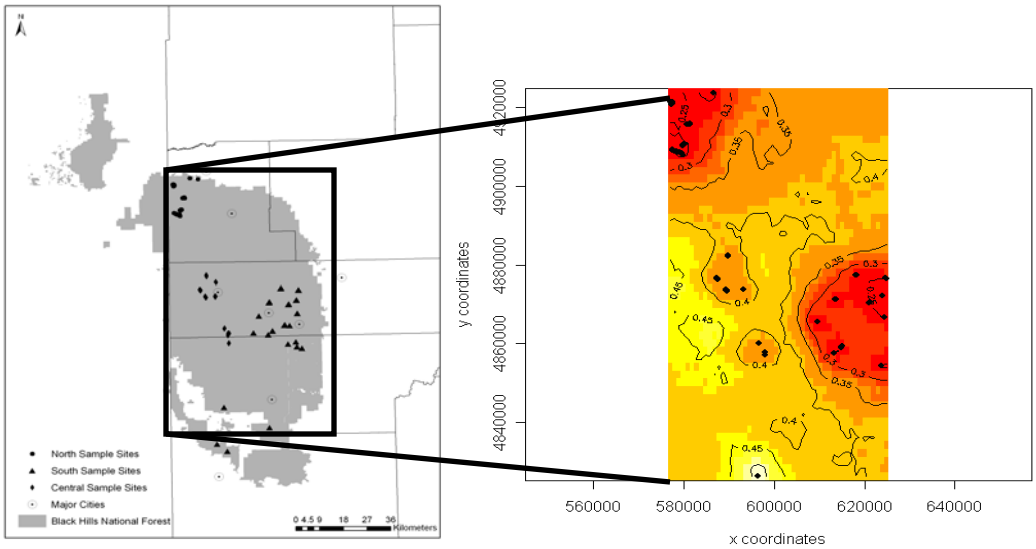

Figure 4.2. The right diagram shows the posterior probability of each sample for northern flying squirrels, which displays population membership. Tessellations for the spatially explicit GENELAND analysis indicate the probability that a sample belongs to a particular subpopulation ranging from low (dark color) to high (light color).

The PCA shows that individuals from the central subpopulation are clustered together (Figure 4.3). However, this is relatively weak structure according to low weightings on PCI (14.94%) and PCII (9.56%). Individuals from north and south do not show an affinity to these regions, whereas individuals from the central region seem to show a slight affinity to this region. However, numbers are greatest in the north and central regions.

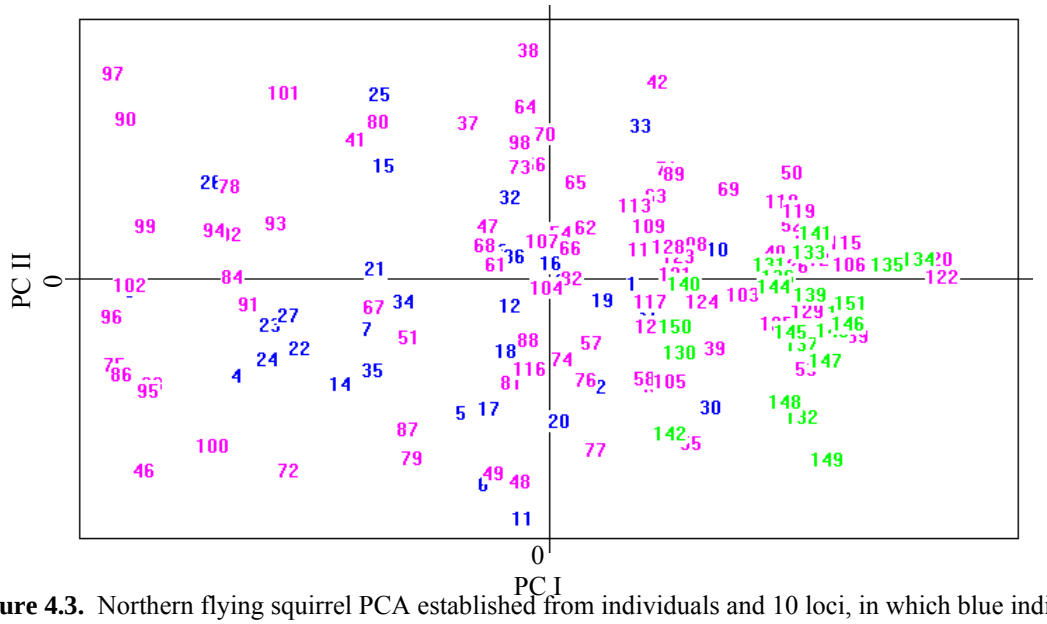

Figure 4.3. Northern flying squirrel PCA established from individuals and 10 loci, in which blue indicates individuals from the south, pink indicates individuals from the north, and green indicates individuals from the central regions of the Black Hills.

Northern flying squirrel subpopulations have a low F_{ST} (0.04), suggesting high gene flow within the overall population. However, pairwise F_{ST} estimates were significant between the south and north subpopulations and the south and central subpopulations when subpopulations were designated prior to analyses (Table 4.5). Inbreeding rates (i.e., F_{IS}) of each subpopulation are as follows: 0.10 for the southern subpopulation, 0.05 for the northern subpopulation, and 0.43 for the central subpopulation. Inbreeding is high for the central subpopulation. However, in the overall population (i.e., with all subpopulations combined) inbreeding is relatively low, 0.031. In 70% of the loci in the central subpopulation, observed heterozygosity is lower than expected heterozygosity, which could cause the high inbreeding estimate. However, observed heterozygosity in the central subpopulation is higher in four loci and lower in one locus in comparison to the total population observed heterozygosity (Table 4.6, Figure 4.4). AMOVA revealed that 3.84% ($p < 0.05$) of the microsatellite variation is observed among subpopulations, -3.15% ($p < 0.05$) of the variation is observed among

individuals within subpopulations, and 99.31% ($p < 0.05$) of the variation is observed within individuals.

Table 4.5. Pairwise F_{ST} estimates between subpopulations. Bolded numbers indicate significance ($p < 0.05$).

	south	north
north	**0.02**	
central	**0.13**	0.11

Table 4.6. Observed and expected heterozygosity per subpopulation. Bolded indicates statistically significant ($p < 0.05$).

	South		North		Central	
	H_O	H_E	H_O	H_E	H_O	H_E
GS2	0.50	0.72	0.48	0.52	0.51	0.95
GS4	0.71	0.82	0.64	0.56	0.13	0.14
GS13	0.00	0.00	0.01	0.01	0.17	0.18
FLS1	0.06	0.06	0.12	0.04	0.05	0.05
FLS6	0.80	0.76	0.83	0.80	0.82	0.95
GLSA12	0.00	0.00	0.09	0.05	0.22	0.24
GLSA22	0.19	0.21	0.21	0.20	0.45	0.52
GLSA48	0.68	0.63	0.58	0.39	0.87	0.67
GLSA52	0.67	0.74	0.47	0.54	0.67	0.86
GLSA65	0.16	0.17	0.12	0.13	0.59	0.52
Mean	**0.38**	**0.41**	**0.36**	**0.32**	**0.45**	**0.51**

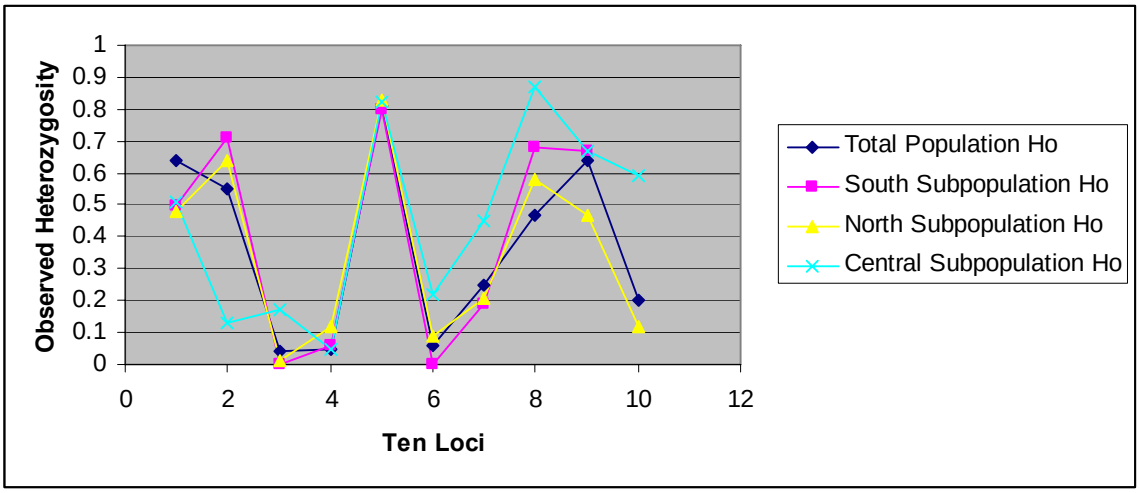

Figure 4.4. Observed heterozygosity in the total population, south subpopulation, north subpopulation, and central subpopulation, in which 1 = GS2, 2 = GS4, 3 = GS13, 4 = FLS1, 5 = FLS6, 6 = GLSA12, 7 = GLSA22, 8 = GLSA 48, 9 = GLSA 52, and 10 = GLSA 65.

I used both the panmictic and IBD models to test for isolation by distance. Both models show similar results, in which there is a weak isolation by distance of individuals.

Based on sample sites, as sites become farther apart from each other (in geographical distances), they seem to exchange fewer genes (slope = 0.017, $r^2 = 0.05$, p = 0.04; Figure 4.5).

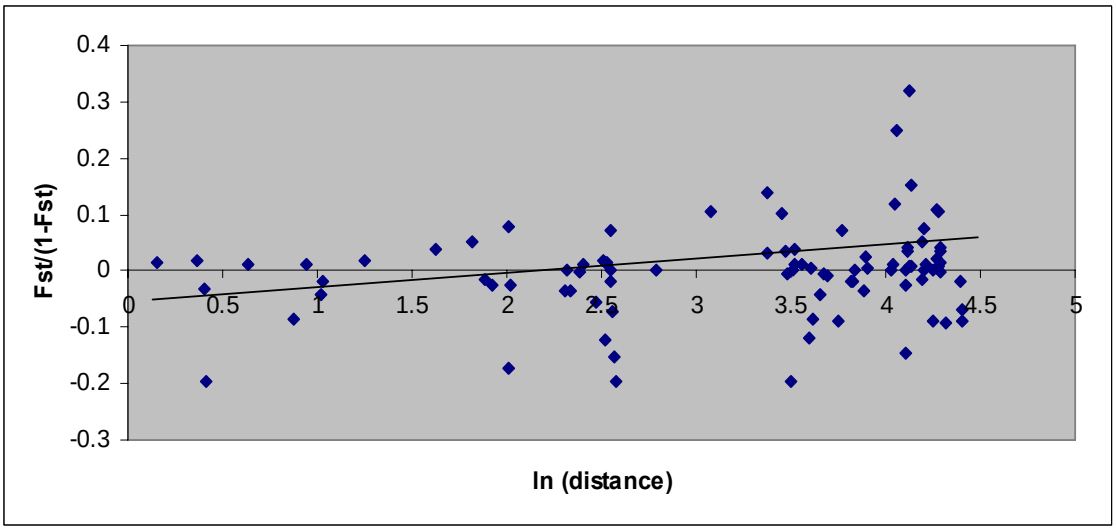

Figure 4.5. Multilocus estimates of pairwise differentiation are plotted against distance, in which differentiation among northern flying squirrels is based on sample sites.

Theta (θ) values, a measure of effective population size and mutation rate, of the subpopulations of northern flying squirrels from the southern, northern, and central Black Hills are 5.76 (95% CI = 5.54, 5.98), 0.59 (95% CI = 0.58, 0.60), and 0.55 (95% CI = 0.54, 0.57), respectively (Table 4.7). Estimates in the south are higher than the north and central regions. Migration is asymmetric between subpopulations in the Black Hills. Immigration rates range from 0.33 to 4.95, with the highest immigration occurring from the northern into the central subpopulation and the lowest immigration occurring from the southern into the central subpopulation (Table 4.7, Figure 4.6). BayesAss also shows asymmetry in gene flow between subpopulations. Migration rates ranged from 0.006 to 0.32, with the highest immigration occurring from the central into the northern subpopulation and lowest immigration occurring from the southern into the northern subpopulation (Figure 4.6). The two programs slightly differ in migration patterns

between subpopulations however both programs show the importance of the central subpopulation as a contributor of migrants into the northern and southern subpopulations (Table 4.7, Figure 4.6).

Table 4.7. Migration estimates in northern flying squirrels from the Black Hills directly pulled from MIGRATE, in which 1 represents the southern subpopulation, 2 represents the northern subpopulations, and 3 represents the central subpopulations. High values associated with the central subpopulation are in bold.

Parameter	0.025%	MLE	0.975%
Theta, south	5.54	5.76	5.98
Theta, north	0.58	0.59	0.60
Theta, central	0.54	0.55	0.57
M12 (south-north)	0.29	0.34	0.38
M13 (south-central)	0.28	0.33	0.39
M21 (north-south)	1.51	**1.59**	1.67
M23 (north-central)	4.74	**4.95**	5.17
M31 (central-south)	1.44	**1.52**	1.60
M32 (central-north)	2.50	**2.63**	2.77

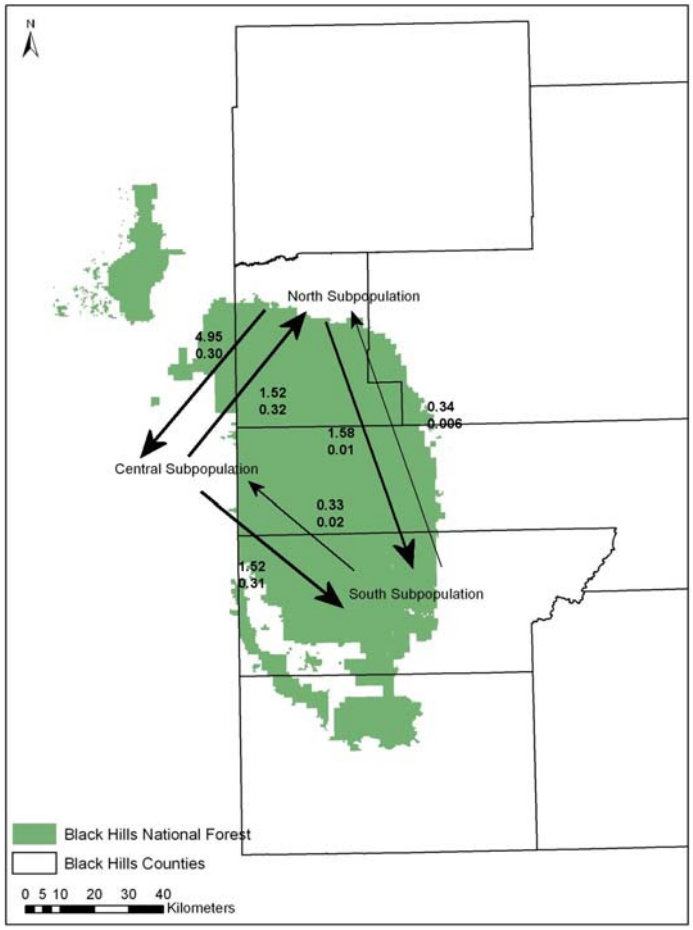

Figure 4.6. Migration rates between subpopulations in the Black Hills. MIGRATE values are on top and BayesAss values are on bottom.

DISCUSSION

The Black Hills, formed during a series of uplifts, are comprised of a mixture of grasses and forests over a uniquely structured landscape (Froiland 1978, Ch. 1). The northern Black Hills is higher in elevation than the southern Black Hills, but the highest elevation is located in central to north-central Black Hills where granite structures are exposed. Vegetation and topography likely influence patterns of genetic exchange, in

which granite outcrops and heterogeneous habitat may cause a barrier to gene flow thereby causing substructure.

Northern flying squirrels reside in the mesic, deciduous-coniferous forests of the north and central Black Hills (M. Hough unpublished data). As a result, it was expected that more gene flow would occur between the north and central subpopulations of northern flying squirrels. However, genetic exchange between subpopulations showed surprising results when considering the topography and vegetation gradients in the Black Hills as well as the natural history of rodents.

Northern flying squirrels in the Black Hills show low levels heterozygosity, as is the case with other populations (Bidlack and Cook 2002). In some cases, there are deviations from Hardy-Weinberg equilibrium and presence of linkage disequilibrium. Small, isolated northern flying squirrel populations, such as island populations in Alaska, have lower heterozygosity and allelic diversity than populations of flying squirrels that are large and continuous, such as mainland populations in Alaska (Bidlack and Cook 2002). Alaskan island population heterozygosity levels range from 0.13 to 0.44 (Bidlack and Cook). Moreover, overall heterozygosity is 3.58% in northern flying squirrels tested from populations in eastern North America (Arbogast et al. 2005). Comparatively, the Black Hills subpopulation heterozygosity levels are 0.36, 0.38, and 0.45 in the north, south, and central regions, respectively. Thus, it is expected that the Black Hills population shows low heterozygosity, departure from Hardy-Weinberg equilibrium, and some linkage disequilibrium due to its isolation.

According to data analyses with STRUCTURE, there seems to be genetic exchange occurring between all three subpopulations. STRUCTURE suggests that there may be three

subpopulations, but *q* and alpha values suggest that there may be one population. Moreover, assignment of individuals through STRUCTURE indicates that the central subpopulation may be distinct from the north and south subpopulation, and squirrels in the northern and southern are genetically more similar. Regardless, there is little to no apparent substructure in the Black Hills populations.

Migration rates suggest that the central subpopulation may contribute immigrants to both the northern and southern subpopulation, which is likely the explanation for high gene flow among all subpopulations as suggested by STRUCTURE. However, recent gene flow between the north and south subpopulations is rather small, as suggested by the estimates from BayesAss. This may indicate that there is a recent barrier to gene flow (e.g., fragmentation of forested lands), which may lead to eventual substructure in the Black Hills northern flying squirrel population.

GENELAND and Mantel tests as well as PCA suggest some isolation by distance between individuals leading to slight geographic patterning of subpopulations. The central subpopulation tends to have greater clustering individual genotypes than the north and south subpopulations based on these analyses. In addition, as individuals become farther apart they exchange fewer genes, but this is not well-supported as evidenced by the low r^2 value for the isolation by distance model. Finally, it appears that the north and south are patterned such that they exchange more genes with each other than with the central region. These results suggest that the north and south subpopulations may have slightly more gene flow between each other possibly due to lack of barriers between these regions or from migrants traveling long distances to breed.

There are small discrepancies between STRUCTURE and GENELAND when considering the number of subpopulations each program estimated for flying squirrels. This may result from sampling schemes, different analytical methods, and/or data interpretation (Rowe and BeeBee 2007), thus additional population estimates were obtained.

Overall FST estimates are low suggesting high gene flow throughout the entire Black Hills population, supporting results obtained from STRUCTURE. Moreover, pairwise FST estimates in north-south and south-central regions are significant. Barratt et al. (1999) also observed differentiation among alleles, and suggested that these data are indicative of high levels of inbreeding within subpopulations. Conversely, inbreeding rates are low in the northern and southern subpopulations but high in the central subpopulation, which suggests a lack of genetic connectivity. In addition, molecular variance is likely a result of individual differences rather than subpopulation/population differences. Furthermore, there might be evidence of more ancient differentiation among regions (Barratt et al. 1999). Rodents are generally small and have fast generation times and large effective population sizes, thus they might be expected to generate large numbers of new alleles by mutation in individuals (Bromham et al. 1996, Li et al. 1996), which could lead to genetic divergence if populations or subpopulations are, or become, isolated.

According to the low F-statistics, there is high gene flow between subpopulations within the Black Hills, which accounts for the majority of the genetic variation. A high number of migrants from the central subpopulation move into the northern and southern subpopulations. Migrants from the central region appear to be important in the

maintenance of the gene pool in the Black Hills. With an overall low F_{ST} value, low F_{IS} values, and little overall subpopulation structure, there may be an indication that the northern flying squirrel subpopulations are panmictic, forming one large population.

The total population (i.e., all subpopulations) may be panmictic based on low F-statistics and relatively high migration rates. In Alaska, a complex of northern flying squirrel populations found on several islands are genetically very similar, suggesting current or recent gene flow among these islands (Bidlack and Cook 2002). Due to low heterozygosity, it is likely both squirrel populations are experiencing a weak Wahlund effect, where weak subpopulation structure caused a reduction in heterozygosity. Eurasian red squirrel populations in the Italian Alps also showed a weak Wahlund effect due to a deficit in heterozygosity and no substructure based on Hardy-Weinberg equilibrium and population differentiation (Trizio et al. 2005). In addition, isolation-by-distance models suggest a significant correlation between genetic and geographical distance over a large scale (Trizio et al. 2005). Trizio et al. (2005) examined population genetic structure in a continuously forested habitat much like the Black Hills. The Black Hills squirrel population shows characteristics similar to Eurasian red squirrel populations.

The Black Hills squirrel population shows a weak correlation between genetic and geographic distance, in which more gene flow occurs at a shorter distance. This suggests that individuals are migrating shorter distances possibly to find suitable mates or adequate habitat. However, the south and north subpopulations are more genetically similar than either is to the central subpopulation. In addition, the central population tends to show more inbreeding but contributes migrants to the north and south

subpopulations. This suggests that the central region provides individuals to other regions and serves to increase gene flow in other regions of the Black Hills but not necessarily within its own region.

The density of northern flying squirrels in different regions of the Black Hills likely reflects the patterns of habitat distribution of the Black Hills. Northern flying squirrels are found in mesic areas with a mixture of aspen, oak, and pine forests and an abundance of den sites (i.e., snags) in the Black Hills (M. Hough pers. comm.). Subpopulations of northern flying squirrels are likely more evenly distributed in the central and northern Black Hills due to habitat availability in these areas. Migration and gene flow are more common between the northern and central subpopulations due to continuity of habitat and population distribution.

Northern flying squirrels are found throughout the Black Hills, but found in higher densities in the northern and central regions. Data, such as F-statistics and migration rates, suggest high gene flow between all three subpopulations (north, central, and south) in the Black Hills. Between these subpopulations, it appears that migration is greatest between the northern and central subpopulations. But, significant pairwise Fst estimates and low heterozygosity suggest that the Black Hills, though panmictic, may suffer from the Wahlund effect due to some subpopulation structuring, which is likely a result of ancient founding events. Additional sampling in areas not previously sampled should be conducted to examine these squirrel subpopulations further. This will allow for a more comprehensive look into the population genetic structure of northern flying squirrels in the Black Hills.

CHAPTER 5: PHYLOGEOGRAPHY OF THE NORTHERN FLYING SQUIRREL (*GLAUCOMYS SABRINUS*) POPULATION IN THE ROCKY MOUNTAINS, BLACK HILLS, AND MIDWEST

INTRODUCTION

Currently, the northern flying squirrel (*Glaucomys sabrinus*) is distributed in the northern regions of North America (Wilson and Ruff 1999), including the Black Hills of South Dakota and Wyoming (Wells-Gosling and Heaney 1984, Ch. 1). No known populations exist in South Dakota outside the Black Hills (Kiesow et al. 2007). The Black Hills flying squirrel population is considered disjunct from other populations within their range in northern and northwestern North America (Wells-Gosling and Heaney 1984, Ch. 1).

It remains undetermined as to whether the northern flying squirrel in the Black Hills represents a unique subspecies. This has caused the classification and reclassification of this population as a separate species or subspecies. King (1951) detected differences in measurement data, in which northern flying squirrel specimens from the Black Hills had larger skulls, longer bodies, and darker fur than specimens from other parts of their range. As a result, the population of northern flying squirrels found in the Black Hills thereby suggesting the reclassification of the subspecies from *G. s. canescens* to *G. s. bangsi*. Wells-Gosling and Heaney (1984) reported that the northern flying squirrel population in the Black Hills is a disjunct population and thus genetically isolated from other populations in North America, and the closest northern flying squirrel population of *G. s. bangsi* is located in western Wyoming. In addition, high cytochrome-

b sequence variation was detected among northern flying squirrel populations (Arbogast 1999), indicating the presence of two clades, one of which corresponds to the *G. s. bangsi* subspecies.

Subspecific names in *Glaucomys* may be incorrectly applied because of difficulties in identifying and/or deciphering differences in morphological characteristics between regions (Hall 1981), so further investigation is needed to ascertain their taxonomic status. Northern flying squirrels are widespread in the Black Hills and may be taxonomically distinct compared to conspecific populations in other areas of North America. If they are distinct, they may warrant further protection. I examined phylogeographic patterns of Black Hills northern flying squirrels to other nearby populations, using mtDNA sequences and microsatellite data, to determine the genetic relatedness between these populations and to test their taxonomic distinctiveness.

METHODS

Study Sites and Sample Collection

The Black Hills was chosen as a sample site for several reasons. The Black Hills are unique geological formations with many geological and topographical features, are isolated from nearby mountain ranges, and serve as home to many remnant species (Ch. 1). As a result, the Black Hills is an excellent study site for examining within-population genetic structure of an isolated population.

Sample sites, i.e., trap sites, were interspersed throughout the south, north, and central regions of the Black Hills from 2005 – 2007 (Figure 1.5, Ch. 1). Sites were selected based on previous sightings and suitable habitat. The south region was sampled

from 9 May to 14 July 2005 and 11 – 18 August 2005, the north region was sampled from 10 May to 14 July 2006 and 15 – 25 August 2006, and the central region was sampled 10 May to 24 June 2007.

Mountain ranges near to the Black Hills, i.e., the northern Rocky Mountains and western Midwest, were sampled to collect northern flying squirrel samples from nearby populations within this squirrel's range (Ch. 1). Western, i.e., Montana, Idaho, Utah, and Wyoming (hereafter called "west"), and eastern, i.e. Minnesota and Wisconsin (hereafter called "east"), states were trapped in areas with previous sightings and suitable habitat in order to obtain ear clippings (Figure 5.1). Western states were sampled from 18 May 2006 to 12 August 2006, and eastern states were sampled from 14 June 2006 to 25 June 2006 and 10 July 2006 to 20 July 2006. In addition, tissue samples were collected in 2005, albeit sporadically, from other biologists in states west and east of the Black Hills.

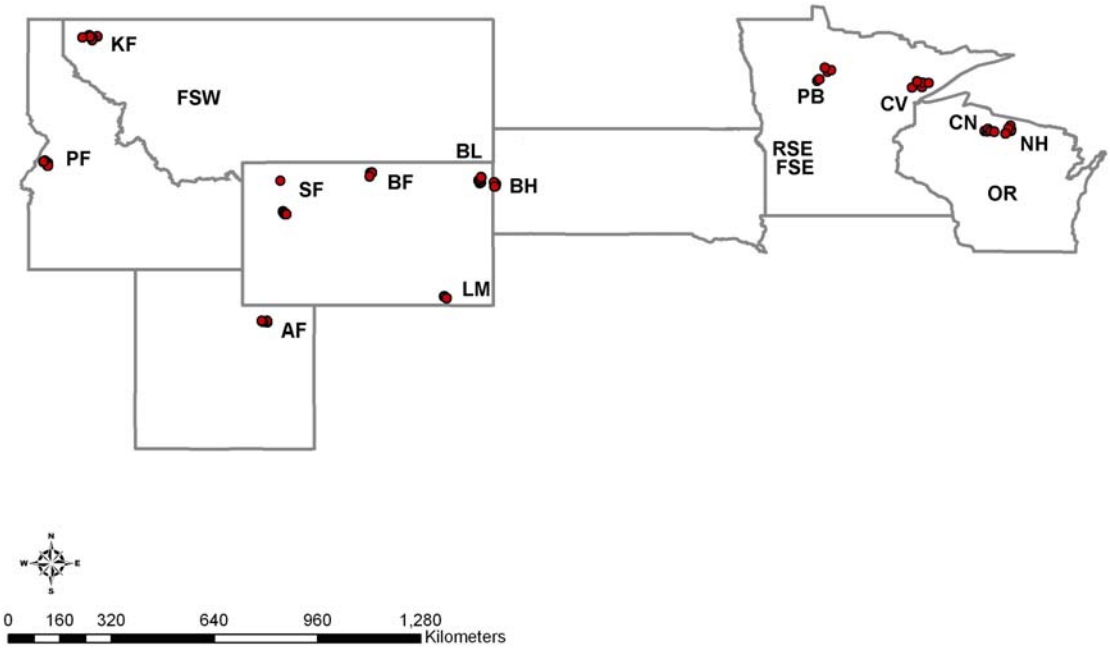

Figure 5.1. Locations of samples sites indicated by the red dots.

To collect samples, 20 Havahart® and/or Tomahawk© baited traps were placed in a line transect, with one trap per tree every 60 – 80 m. Bait included a mixture of peanut butter, bacon grease, and oatmeal. Traps were placed in trees in suitable habitat for up to 14 days and checked each morning during this period. Handling and capturing techniques were approved by the South Dakota State University Animal Care and Use Board.

Each captured northern flying squirrel was weighed and classified as adult or juvenile. In addition, ear clippings were collected from captured individuals for genetic analysis. A total was 151 northern flying squirrel samples (i.e., ear clippings) collected from the Black Hills (Table 5.1, Ch. 1), a total was 53 samples collected from the west, and a total was 33 samples collected from the east. A subset of these samples, 64, was used for mtDNA genetic analyses (Table 5.2), and all samples were used for microsatellites analysis.

Table 5.1. Number of northern flying squirrel samples collected from each region of the Black Hills.

Site	Number of Samples
North	93
Central	36
South	22
Total	151

Table 5.2. Identification codes and number of samples sequenced for mtDNA analysis in states west and east of the Black Hills.

	ID	Area	State	Samples
West States	PF	Payette National Forest	ID	1
	KF	Kootetnai National Forest	MT	5
	FSW	Western Montana	MT	6
	SF	Shoshone National Forest	WY	4
	BF	Bighorn Mountains	WY	0
	LM	Laramie Mountains	WY	0
	AF	Wasatch - Cache National Forest	UT	5
			Total	21
East States	RSE/FSE	Western Minnesota	MN	4
	PB	Paul Bunyon State Forest	MN	0
	CV	Cloquet Valley State Forest	MN	0
	CN	Cheuamegon Nicolet National Forest	WI	2
	NH	Northern Highland State Forest	WI	3
	OR	Central Wisconsin	WI	3
			Total	12
Black Hills/Bear Lodge	BH	Black Hills National Forest	SD	25
	BL	Bear Lodge National Forest	WY	6
			Total	31

Other areas in South Dakota, outside of the Black Hills, were also trapped for northern flying squirrels. Trapping techniques were similar to those used in the Black Hills. Areas trapped in South Dakota included the extreme northeast (i.e., Secchi Hollow and Hartford Beach SP) from 24 to 29 July 2006 and the extreme northwest (i.e., Custer National Forest) from 27 May to 2 June 2006. No samples were collected from these areas.

DNA Extraction and Amplification

DNA was extracted from ear clippings (or samples) collected throughout the areas specified above. Extraction was conducted using reagents and methods provided in the QIAGEN DNeasy blood and tissue extraction kit. Ear clippings from five to ten individuals from each sample site were examined with two different mitochondrial DNA (mtDNA) regions (i.e., cytochrome b and mtDNA control region), which were

amplifiable in these squirrels. All amplifications were conducted with 15 uL reactions containing 1.0 uL of genomic DNA, 0.5 uL of 10 uM forward primer, 0.5 uL of 10uM reverse primer, and 7.5 uL of 2X PCR Master Mix (Promega). The mtDNA cytochrome b region (forward and reverse primers) consisted of L14724 (5-CGAAGCTTGATATGAAAAACCATCGTTG-3) and H15149 (5-AAACTGCAGCCCCTCAGAATGATATTTGTCCTCA-3), which targeted the cytochrome b region (Arbogast 1999). Amplification occurred under the following conditions: 93ºC for 3 min followed by 3 cycles of 93ºC for 3 min, 41ºC for 15 sec increasing to 72ºC over 3 min, and 72ºC for 2 min then followed by 29 cycles of 93ºC for 45 sec, 56ºC for 1 min 30 sec, and 72ºC for 2 min 30 sec followed by 72ºC for 10 min. The mtDNA control region (forward and reverse primers) was amplified using primers H16359 (5-GGAAGGGGATAGTCATTTGG-3; Barratt et al. 1999) and RScont6 (5-CCTTCAACTCCCAAAGCTGA-3; Hale et al. 2001), which targeted a 543 bp stretch of the mtDNA control region. Amplification occurred under the following conditions: 94ºC for 4 min, then 30 cycles of 94ºC for 30 s, 50ºC for 30 s, 72ºC for 1 min 30 sec, with a final extension of 72ºC for 10 min (Hale et al. 2001).

All squirrel samples (i.e., all samples from the Black Hills, west, and east) were also amplified at 10 microsatellite loci using primers designed for northern flying squirrels. Five primers are described in previous publications: GS2, GS4, GS13 (Zittlau et al. 2000), FLS1, and FLS6 (Winterrowd et al. 2005), and five primers are newly developed: GLSA12, GLSA22, GLSA48, GLSA52, and GLSA65 (Kiesow et al. unpublished data, Ch. 2). These loci were amplified in 15 uL reactions containing 1.0 uL of genomic DNA, 0.5 uL of 10 uM forward primer, 0.5 uL of 10uM reverse primer, and

7.5 uL of 2X PCR Master Mix (Promega). The polymerase chain reaction (PCR) protocol for primers FLS1 and FLS6 was as follows: an initial denaturing step of 94ºC for 3 min followed by 10 cycles of 94ºC for 40 s, 70ºC (-1ºC per cycle) for 50 s, and 72ºC for 30 s then followed by 38 cycles of 94ºC for 40 s, 60ºC for 50 s, and 72ºC for 30 s with a final elongation step of 72ºC for 5 min (Winterrowd et al. 2005). The PCR protocol for primers GS2, GS4, and GS13 was as follows: an initial denaturing step of 94ºC for 1 min followed by 3 cycles of 94ºC for 30 s, 54ºC for 20 s, and 72ºC for 5 s then followed by 33 cycles of 94ºC for 15 s, 54ºC for 20 s, and 72ºC for 1 s with a final elongation step of 72ºC for 30 s (Zittlau et al. 2000). The PCR protocol for primers GLSA12, GLSA22, GLSA48, GLSA52, and GLSA65 was as follows: an initial a denaturing step of 95ºC for 4 min followed by 35 cycles of 95ºC for 45 s, annealing temperature (between 52.5ºC and 57.5ºC) for 45 s, and 72ºC for 1 min 30 s with a final elongation step of 72ºC for 7 min (Kiesow et al. unpublished data, Ch. 2). All mtDNA regions and microsatellite loci were amplified on a MJ Research PTC-200 thermocycler or a Bio-Rad MJ Mini thermocycler. Confirmation of PCR amplification was conducted by running a sample on a 1.5% agarose gel and staining with SYBR® Green (Invitrogen).

Amplified mtDNA regions were purified with a PEG precipitation, where mtDNA was precipitated with 20% PEG 800/2.5M NaCl, washed with 80% ethanol, and resuspended in sterile water. Purified mtDNA products were sequenced using the T3 primer and the DYEnamic ET Terminator Cycle Sequencing Kit (General Electric) in 1/8th volume reactions. Sequences were electrophoresed on an Avant 3100 Genetic Analyzer. Forward and reverse sequences were generated for each locus in each

individual. Then, for each locus these contigs were edited and assembled into a consensus sequence using DNAStar© Lasergene and edited with BioEdit© (T. Hall).

Microsatellite samples were multiplexed with five loci per sample and electrophoresed on an ABI PRISM sequencer, where Liz-500 was used as a size-standard (Applied Biosystems). Each forward primer was fluorescently-labeled with VIC (green), PET (red), or 6-FAM (blue) dye. Data collected during each microsatellite run were analyzed with GeneMapper software (Applied Biosystems).

Data Analyses

A list of accessions sampled in this study is provided in Table 5.2. The aligned lengths of the mtDNA regions were 519 bp for cytochrome b and 543 bp for the control region. An outgroup, a sequence from the Russian flying squirrel (*Pteromys volans*; GenBank Accession number AB023910), was used for comparison of the cytochrome b region and combined sequence regions in all trees, and an outgroup, a sequence from the European red squirrel (*Sciurus vulgaris*; GenBank Accession number AY178452), was used for comparison of the control region in all trees. Outgroups were selected based on previous studies (Arbogast 1999) and genetic similarities between species that allow for comparisons with northern flying squirrels.

Edited mtDNA sequences were aligned with ClustalX (Thompson et al. 1994), using slow-accurate pairwise alignment parameters with a gap opening of 10.00 and gap extension of 0.10 and multiple alignment parameters with a gap opening penalty of 15.00 and gap extension penalty of 0.20. Unrooted trees were estimated with PAUP* 4.0 and PHYLIP for each region as well as for combined sequence regions. More specifically,

aligned mtDNA sequences were analyzed in PAUP* 4.0 (Swofford 2003) by using a neighbor-joining method based on genetic distances and maximum parsimony. Default parameters were used for genetic distances, but maximum parsimony was conducted using a heuristic stepwise search. Each method was assessed by conducting bootstrap analysis with 1,000 replications. Aligned sequences were also analyzed using a maximum likelihood approach in PHYLIP (i.e., SEQBOOT, DNAML, CONSENSE; Felsenstein 1993) using default parameters, and support for relationships was assessed by conducting bootstrap analysis with 1,000 replications. All trees were visualized in TREEVIEW 1.4 (Page 1996).

In addition to trees, estimates of percent sequence divergence and nucleotide diversity (i.e., the degree of polymorphism) were calculated for each region. Estimates of sequence divergence for all possible pairwise estimates of taxa were calculated under the two-parameter model of Kimura (1980) using PHYLIP (i.e., DNADIST; Felsenstein 1993), as done by previous squirrel researchers (Arbogast 1999, Arbogast et al. 2001), and estimates of nucleotide diversity were calculated using DnaSP 4.5 (Rozas et al. 2003).

All samples collected per population were used for microsatellite analysis. Distance matrix values for microsatellite data were obtained using MSA 4.05 (Dieringer and Schlštterer 2003). Microsatellite distance matrices (i.e., Nei's distances) were incorporated into PHYLIP (i.e., NEIGHBOR; Felsenstein 1993) to infer phylogenetic relationships and create an unrooted neighbor-joining tree with no outgroup.

RESULTS

Based on the phylogenies from the cytochrome b region (Figures 5.2, 5.3, and 5.4), individuals from the Black Hills and Bear Lodge Mountains are related. All branches are supported by ≥50% bootstrap values. Sequence divergences range from 0.00% to 0.85%, and nucleotide diversity was 0.07. In addition, individuals from the western regions are most related to each other and individuals from the eastern regions are most related to each other. More specifically, Utah and Montana populations are most related in the west, and Wisconsin populations are most closely related in the east.

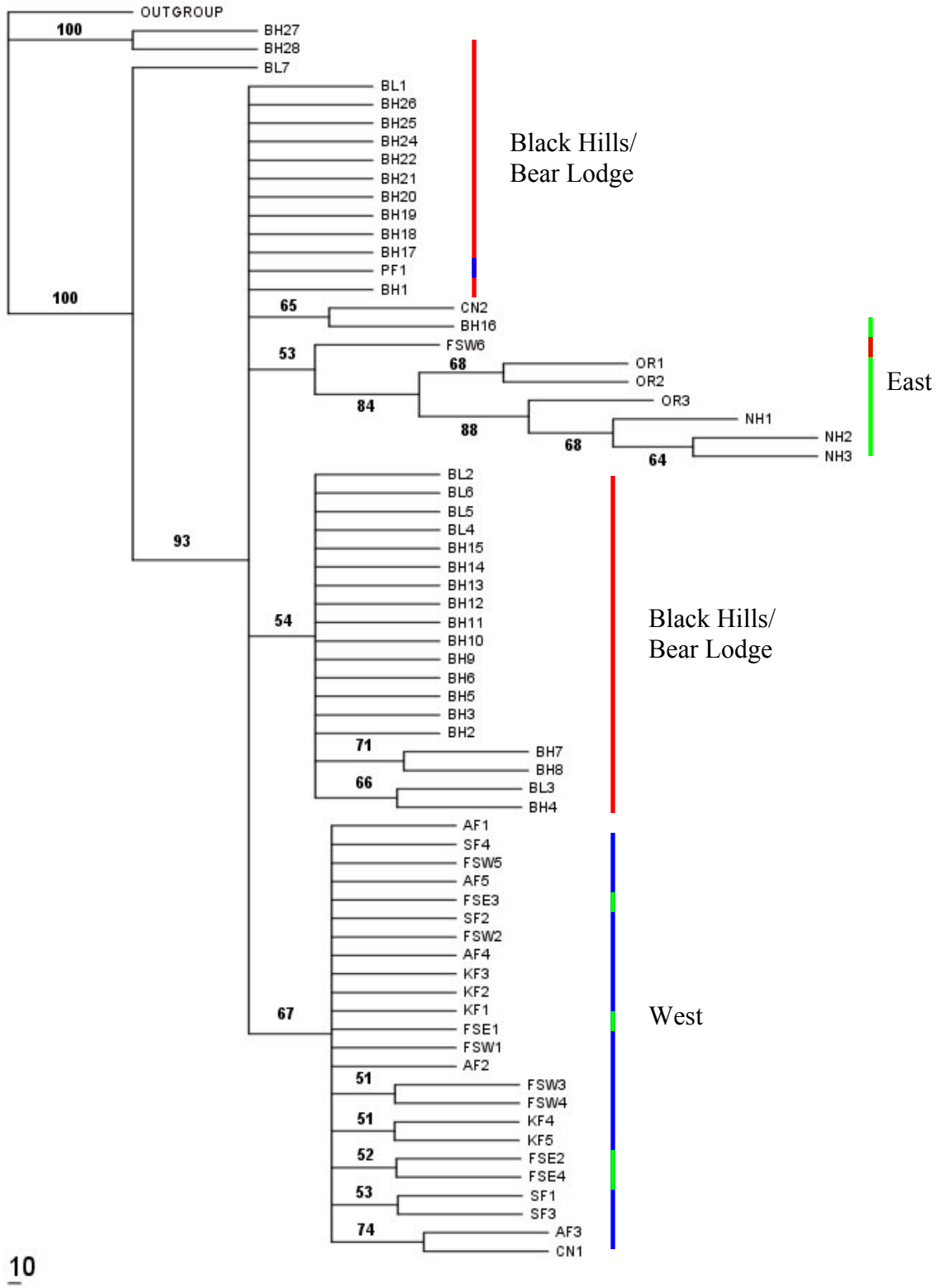

Figure 5.2. Neighbor-joining tree (with bootstrap values) of cytochrome b region depicting the relationship of northern flying squirrels throughout the sample regions. Samples beginning with BH* and BL* are individuals from the Black Hills (BH*) and Bear Lodge (BL*) mountains.

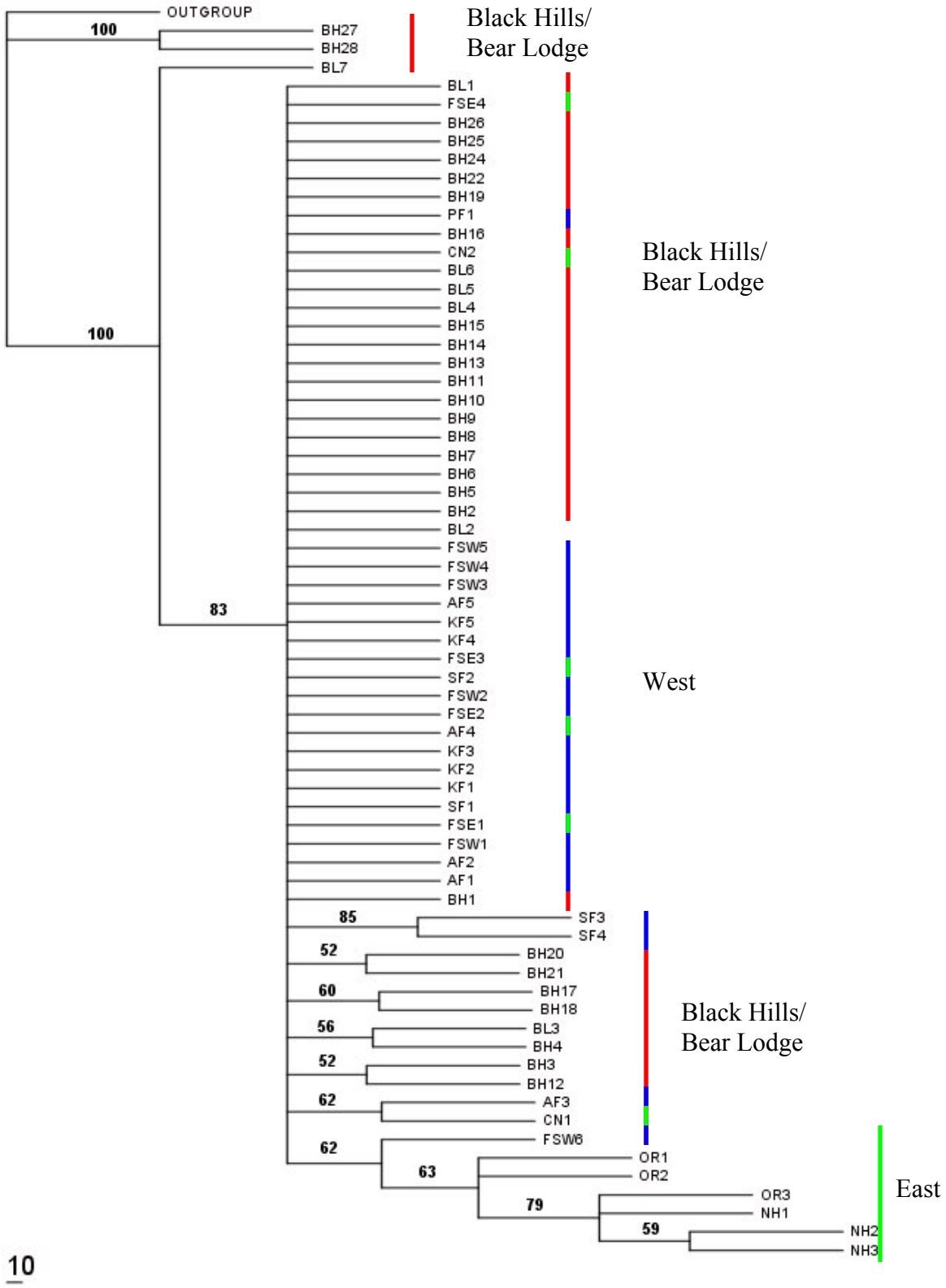

Figure 5.3. Phylogenetic relationship of northern flying squirrels using the cytochrome b region based on parsimony analysis. Samples beginning with BH* and BL* are individuals from the Black Hills (BH*) and Bear Lodge (BL*) mountains.

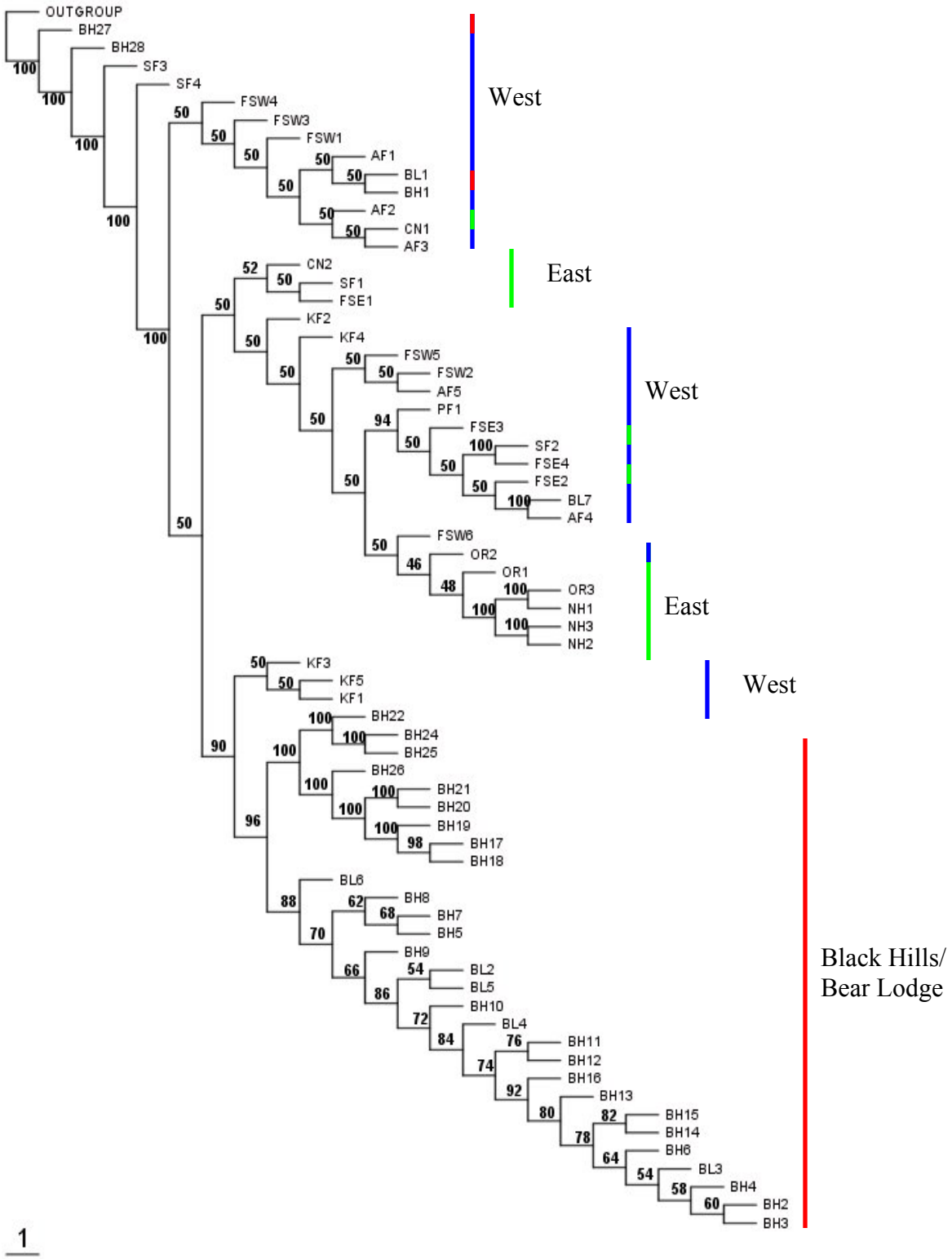

Figure 5.4. Phylogenetic relationship of northern flying squirrel using the cytochrome b region based on maximum likelihood analysis. Samples beginning with BH* and BL* are individuals from the Black Hills (BH*) and Bear Lodge (BL*) mountains.

Phylogenies from the mtDNA control region (Figures 5.5, 5.6, and 5.7) are similar to those created from the cytochrome b region. All branches are supported by ≥50% bootstrap values. Sequence divergences range from 0.00% to 1.43%, and nucleotide diversity is 0.10. Each tree suggests that individuals from the Black Hills and Bear Lodge Mountains are closely related and individuals from the western regions are most related to each other and individuals from the eastern regions are most related to each other. More specifically, Utah, Wyoming, and Montana populations are most related in the west, and Wisconsin populations are most related in the east, with the exception of three individuals. All three phylogenies show that the Black Hills and Bear Lodge Mountain populations may be a monophyletic group.

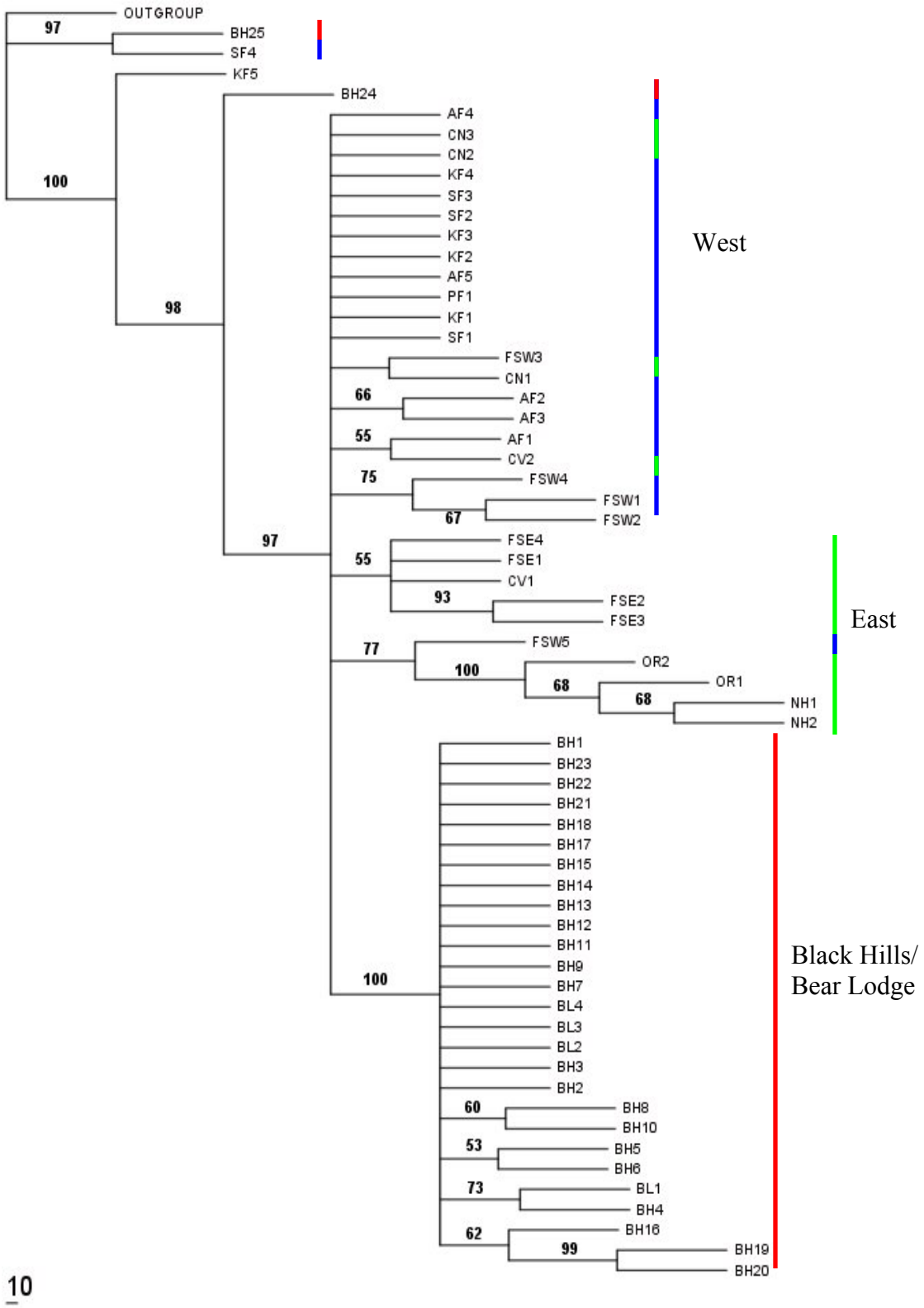

Figure 5.5. Neighbor-joining tree (with bootstrap values) of the control region depicting the relationship of northern flying squirrels throughout the sample regions. Samples beginning with BH* and BL* are individuals from the Black Hills (BH*) and Bear Lodge (BL*) mountains.

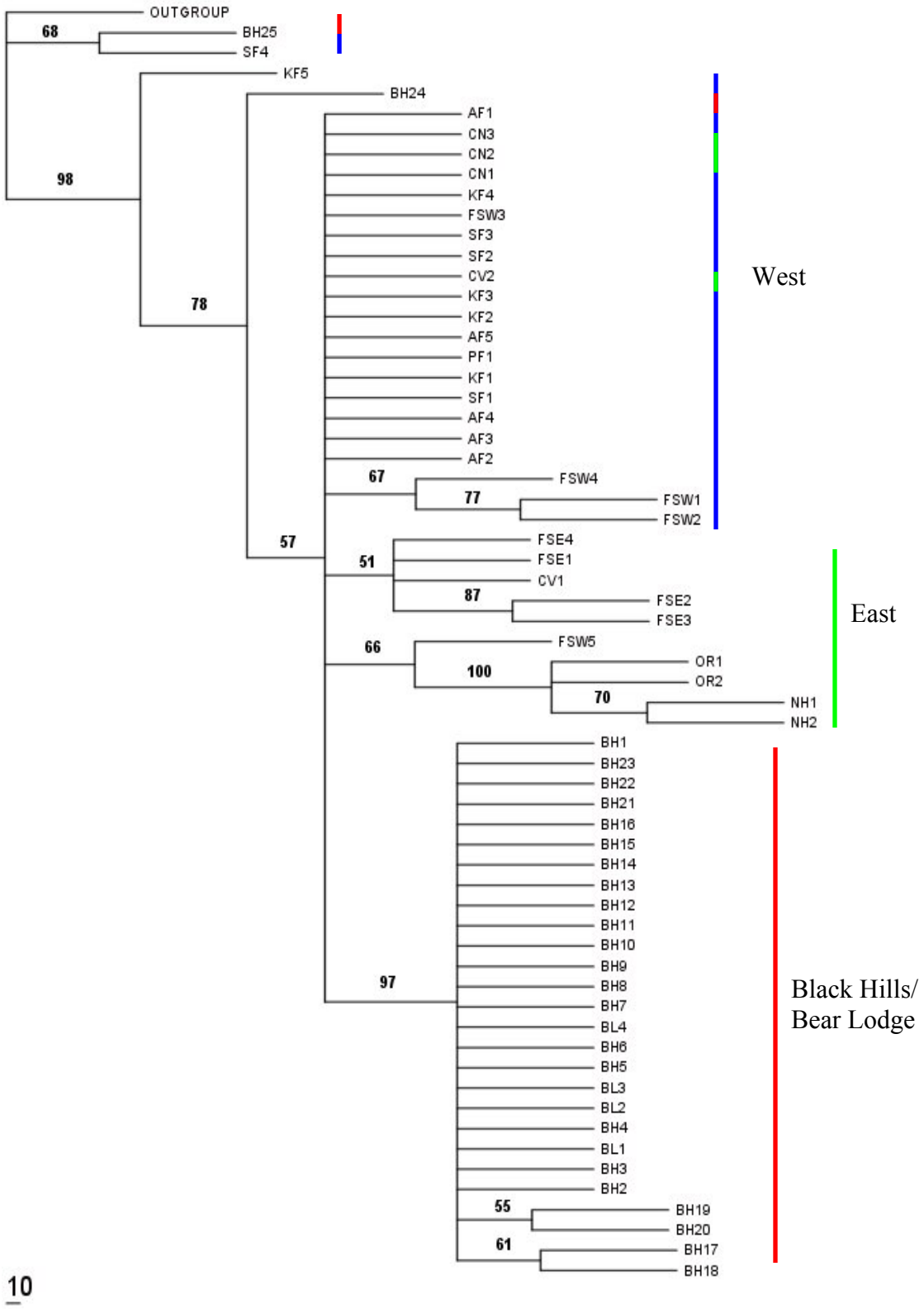

Figure 5.6. Phylogenetic relationship of northern flying squirrels using the mtDNA control region based on parsimony analysis. Samples beginning with BH* and BL* are individuals from the Black Hills (BH*) and Bear Lodge (BL*) mountains.

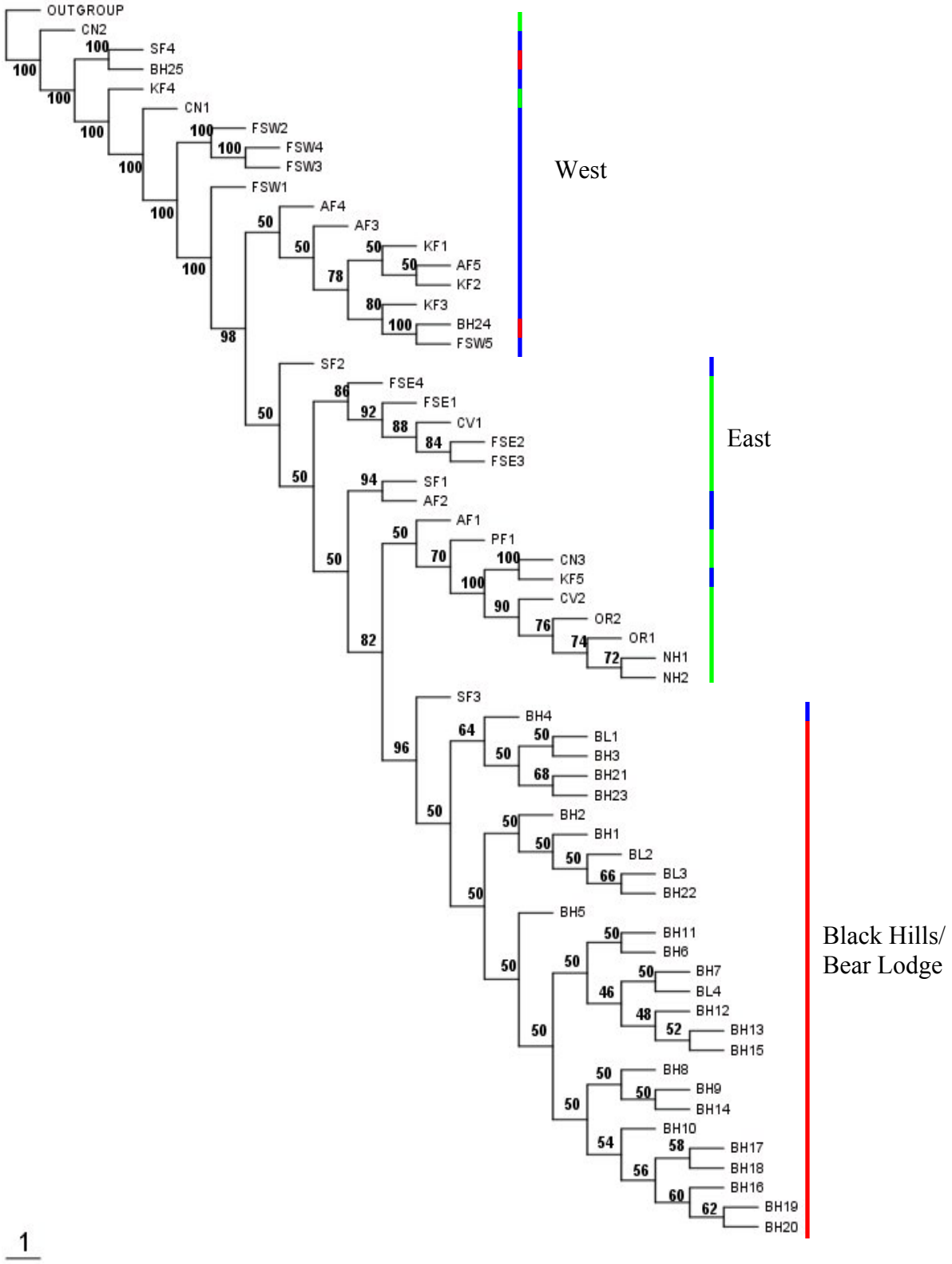

Figure 5.7. Phylogenetic relationship of northern flying squirrels using the mtDNA control region based on maximum likelihood analysis. Samples beginning with BH* and BL* are individuals from the Black Hills (BH*) and Bear Lodge (BL*) mountains.

Phylogenetic analyses with mtDNA regions combined show similar results to trees inferred separately from each mtDNA region (Figures 5.8, 5.9, and 5.10). The Black Hills and Bear Lodge northern flying squirrels form a monophyletic group in all three "combined" trees.

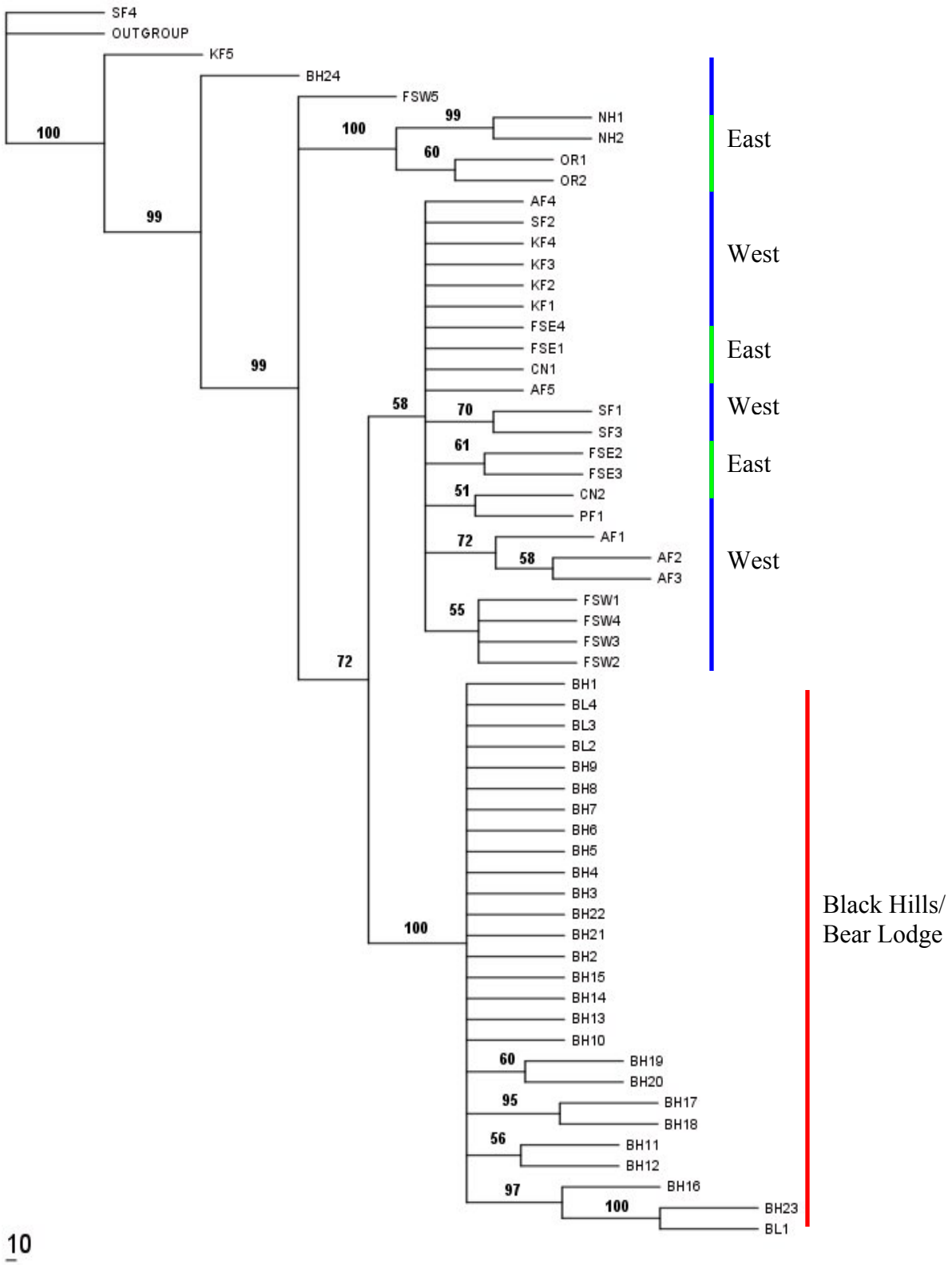

Figure 5.8. Neighbor-joining tree (with bootstrap values) of both regions depicting the relationship of northern flying squirrels throughout the sample regions. Samples beginning with BH* and BL* are individuals from the Black Hills (BH*) and Bear Lodge (BL*) mountains.

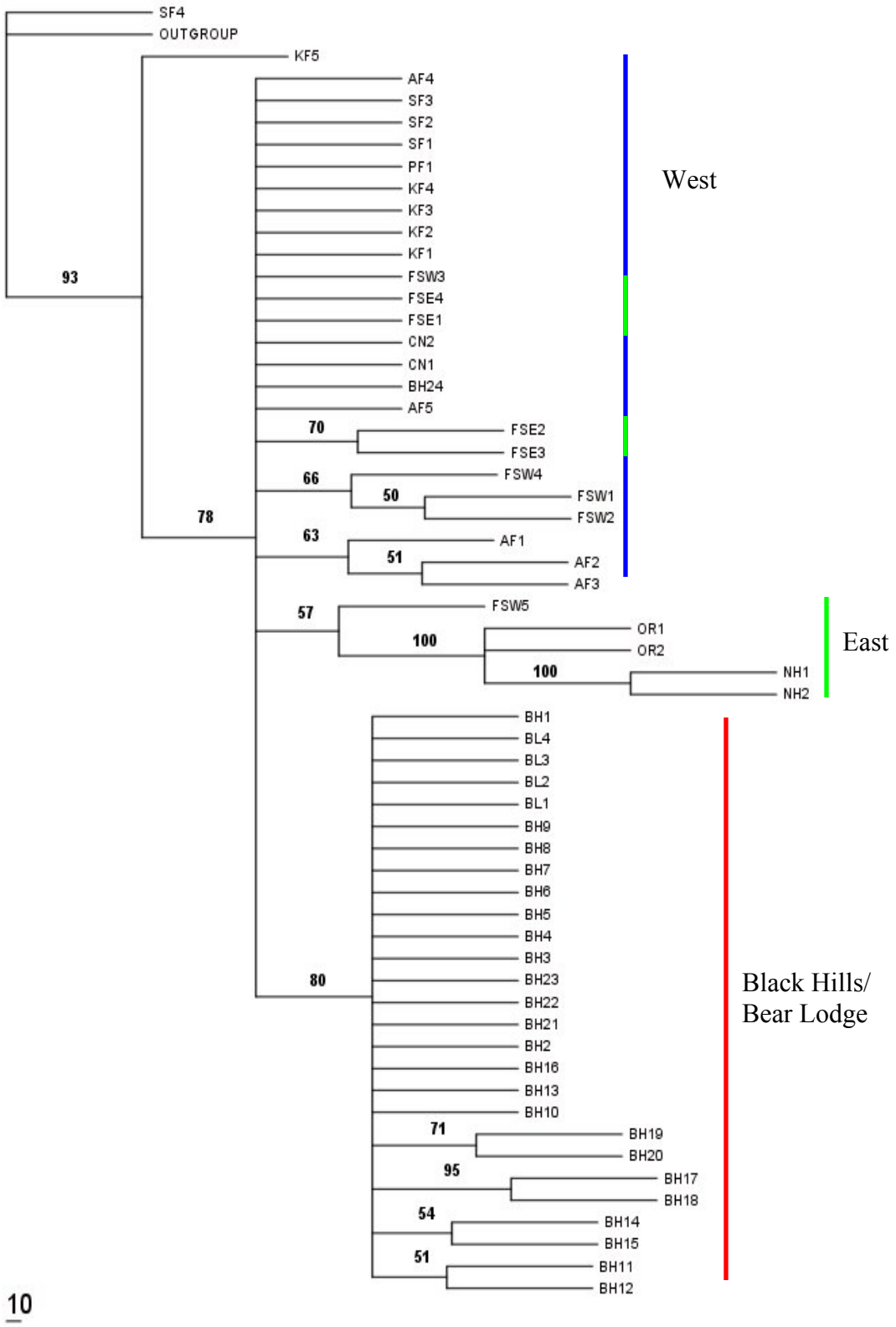

Figure 5.9. Phylogenetic relationship of northern flying squirrels using both regions based on parsimony analysis. Samples beginning with BH* and BL* are individuals from the Black Hills (BH*) and Bear Lodge (BL*) mountains.

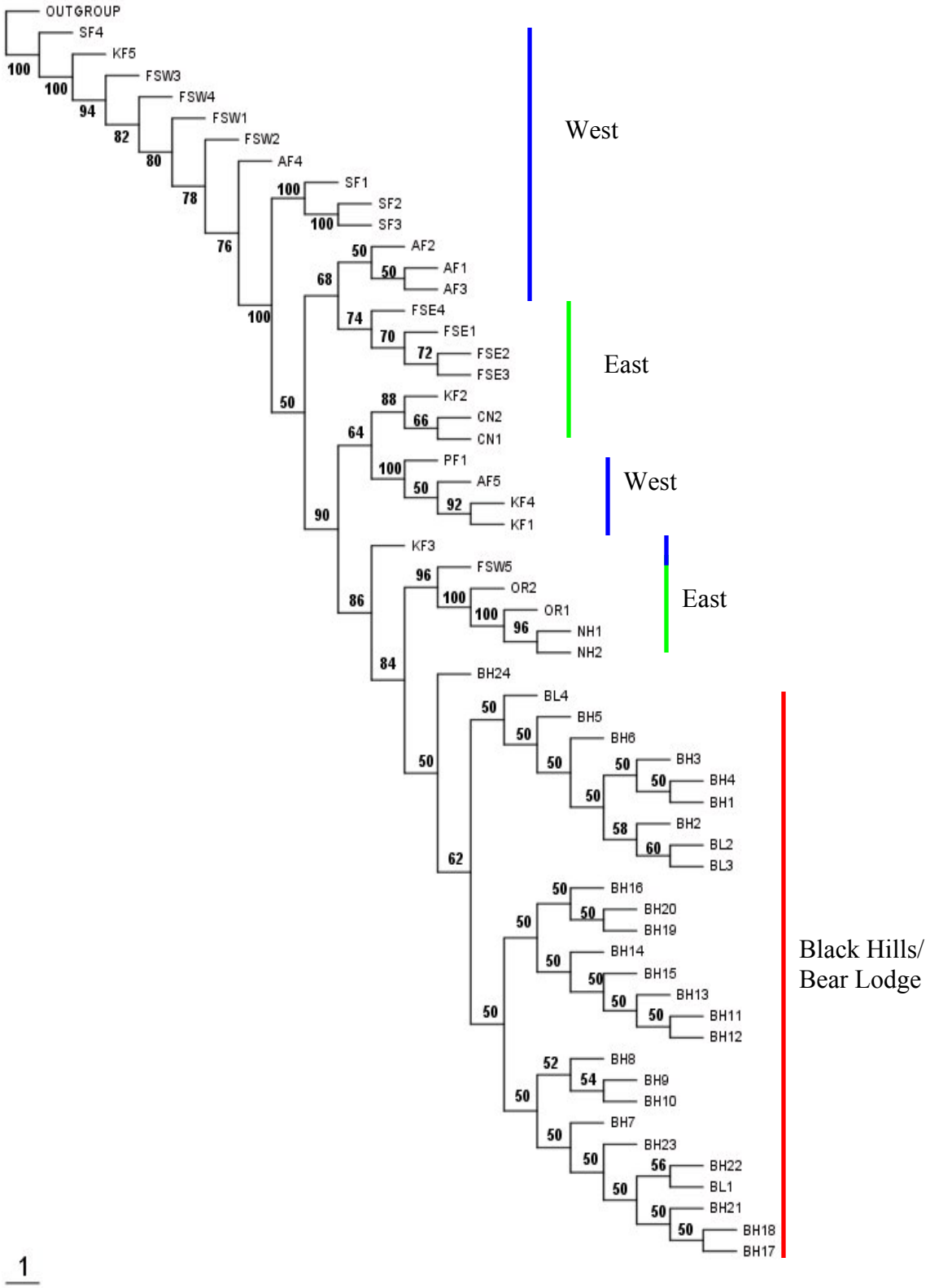

Figure 5.10. Phylogenetic relationship of northern flying squirrels using both regions based on maximum likelihood analysis. Samples beginning with BH* and BL* are individuals from the Black Hills (BH*) and Bear Lodge (BL*) mountains.

The analyses of northern flying squirrel populations from the Black Hills, east of the Black Hills, and west of the Black Hills based on microsatellite data indicate that the populations in eastern regions are most related to each other (Figure 5.11). More specifically, populations from Utah and Wyoming are most genetically similar to each other, and populations from the Black Hills and Bear Lodge Mountains are most similar, which is expected. Populations from northern Minnesota, however, are more genetically similar to states west of the Black Hills. In addition, the Black Hills and Bear Lodge Mountains are most similar to the Utah and Wyoming populations. This is somewhat expected, since populations in western Wyoming are nearest to the Black Hills and Bear Lodge Mountains.

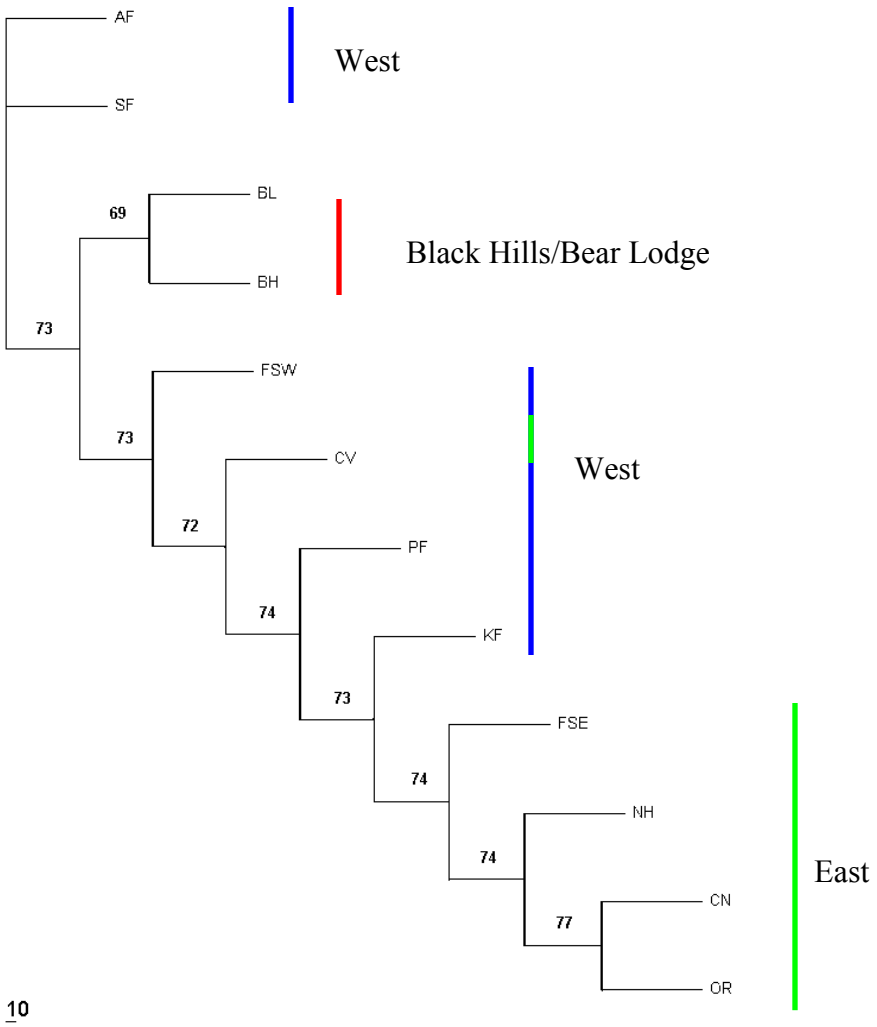

Figure 5.11. Relationship of northern flying squirrel populations based on microsatellite data (with Nei's distances) and neighbor-joining method of analysis.

DISCUSSION

The Black Hills are unique geological formations with a continental climate and coniferous and prairie vegetation (Peterson 1974), disjunct from other boreal and montane biomes. They are one of the oldest formations in North America, and were formed as a result of a series of uplifts starting in the Pre-Cambrian Period and ending in the Pleistocene (Froiland 1974). These uplifts occurred as the central dome of the Black Hills was pushed up from beneath thereby exposing geological layers, where the newest

layers are on the outside and the oldest layers are in the center (Froiland 1974; Figure 1. 4, Ch. 1).

In the late Pleistocene, several glaciers moved across northern North America. The Black Hills were not glaciated but were surrounded by glaciers to the north, east, and west (Froiland 1978, Ch.1). Glaciated regions caused the climate to change to cooler, moist conditions, which resulted in the southward displacement of northern biota (Turner 1974). Peterson (1974) suggested that montane biota was present in the region during the full glacial period, whereas boreal elements may not have appeared in the Black Hills and other periglacial areas until the late glacial period in the late Pleistocene (~10,000 years ago). Thus, the current boreomontane character of the Black Hills likely became established late in the last glacial period, i.e., approximately 10,000 years ago (Turner 1974).

Eventually, the climate became warmer and drier thereby causing the retreat of the Wisconsin ice sheet in the early Holocene (or late Pleistocene). As this occurred, there was a withdrawal of boreomontane elements from the Northern Great Plains. Frequent fires during this time also prevented boreal forests from persisting in areas outside the Black Hills (Turner 1974). Thus, the boreal forest became displaced further northward where the climate was cool and moist, which likely increased the colonization of temperate species replacing boreal elements.

Boreomontane species likely became stranded in the Black Hills because it served as a refugium (Turner 1974), and only the most tolerant species survived in small, isolated populations. Moreover, elements from the deciduous forests probably dispersed from the east into the Black Hills via the east-west river systems and associated valleys

(Hoffman and Jones 1970) thereby making the Black Hills a mixture of coniferous and deciduous forests and plains species (from the surrounding lowland grasslands).

Boreal elements of the Black Hills are disjunct from contiguous boreal forests; the nearest boreal forest is 700 km to the north (Turner 1974). Thus, the retreat of the glacier caused many relict populations of boreal and montane species, including the northern flying squirrel, to remain in the Black Hills and other montane environments. Due to this isolation, the northern flying squirrel population in the Black Hills is likely distinct (or rather unique) from other northern flying squirrel populations.

During their lifetime, northern flying squirrels move within their home ranges by gliding locomotion. Gliding was developed as an adaptation to the arboreal habits of the northern flying squirrel. Gliding from tree to tree allows these squirrels to cover longer distances more quickly and efficiently than by walking/running on the ground (Vernes 2001). As a result, gliding is advantageous to northern flying squirrels not only to help escape predators but also to assist in finding food (i.e., fungi and lichens).

Gliding from tree to tree, while advantageous in some regard, also can be disadvantageous. An extra skin fold on the sides of the body – called *patagium* – is formed such that air is trapped, providing lift, and the musculature on the patagium and forelimbs controls the glide, i.e., the aspect ratio, glide ratio, and speed (Wells-Gosling and Heaney 1984). By doing so, the squirrel may travel from tree to tree with ease and agility. However, these extra skin folds make locomotion on the ground quite difficult, often exposing them to predators. As such, northern flying squirrels are restricted to treed areas for locomotion.

In forested areas, northern flying squirrels glide in a linear fashion. The average distance traveled by these squirrels in one glide approximates 19 m in males and 14 m in females (Vernes 2001). The starting and ending points of a glide must be unobstructed by vegetation because the presence of vegetation at these points affects glide performance. As expected, most glide paths are directed down slope rather than up slope because of the distances that can be traveled (Vernes 2001). Conifers are used more often than non-conifers because they provide a better landing point. With all these components of a glide, it is apparent that gliding locomotion is suitable for forested areas but unsuitable for deforested areas. It is likely the discontinuation of the ancient boreal forest limited immigration and emigration of these squirrels to and from the Black Hills thereby limiting gene flow between these squirrel populations.

Arbogast (1999) collected samples from West Virginia, North Carolina, Utah, Michigan, Alberta, British Columbia, Washington, Oregon, California, Louisiana, and Tennessee and reported high cytochrome-b sequence variation among northern flying squirrel populations in the Pacific Northwest, suggesting the presence of two clades. These clades formed into eastern and western lineages, where the eastern lineage is comprised of populations found directly east of Cascade Mountains (bootstrap 58%) and the western lineage is comprised of populations found in the coastal Pacific Northwest (bootstrap 73%). Sequence divergence among northern flying squirrels in the Arbogast (1999) study ranged from 0 to 2.6%. According to all phylogenies in this study, northern flying squirrels (and red squirrels, Ch. 8) from the Black Hills and Bear Lodge form their own clade based on mtDNA cytochrome b and a control region, and this is genetically different from squirrels in the Rocky Mountains (west) and Midwest (east). Sequence

divergence was relatively small (0 to 0.85%) in populations in the Rocky Mountains, Black Hills, and Midwest, which suggests that divergence may be a result of historical events. It is likely that the phylogeographic discontinuity between the eastern and western lineages was the result of an environmental impediment to gene flow (Arbogast 1999). Furthermore, Arbogast (1999) suggested that other species in the Pacific Northwest show similar phylogeographic patterns thereby it is likely that these species share a historical vicariant event.

Formerly, boreal habitat was contiguous across much of northern North America until the early to middle Pleistocene. At this point, glacial and flooding events divided the eastern and western lineages in areas sampled by Arbogast (1999) via geographic barriers thereby impeding gene flow. During the late Pleisotocene, these lineages remained on boreal refugia in the Pacific Northwest as the boreal forest became fragmented. Moreover, Arbogast (1999) suggested that disjunct populations of northern flying squirrels in the Pacific Northwest are likely found in mountainous regions in the United States, and these populations are closely related to nearby northern populations.

These disjunct northern flying squirrel populations in montane areas of the United States are likely late Pleistocene relicts (Arbogast 1999). A study of Russian flying squirrels (*Pteromys volans*) shows similar patterns of distinctiveness, in which the glacial refugia of Russian flying squirrels is associated with forest dynamics in the Pleistocene (Oshida et al. 2005). Remnants of the boreal forest remain in the Black Hills. Therefore, species like the northern flying squirrel inhabiting the Black Hills during the late Plesitocene were likely isolated by habitat. Moreover, the northern flying squirrel was also restricted by its inability to disperse thereby becoming distinct.

The Black Hills and Bear Lodge Mountains northern flying squirrel (and red squirrel, Ch. 8) populations are isolated from other populations, which suggests that there are few emigrants from and immigrants going into the Black Hills. Isolated northern flying squirrel populations in Alaska show a pattern of genetic isolation by distance, indicating little long-distance gene flow among populations (Bidlack and Cook 2002). Nucleotide diversity in populations from the west, Black Hills, and east is rather high (0.7 to 0.1) compared to past studies (0.01 to 0.03; Arbogast et al. 2005). A high amount of polymorphism may suggest that there is gene flow occurring among sampled northern flying squirrel populations, though this gene flow may be from historically continuous habitat which facilitated genetic exchange. Moreover, northern flying squirrels (and red squirrels, Ch. 8) show characteristics similar to that of an isolated population as evidenced by all trees presented herein. Genetic structure data, i.e., low observed heterozygosity (0.37) but high within-population gene flow (F_{ST} = 0.04, Ch. 4), also suggests that gene flow may have been historically high in the Black Hills.

Jones et al (1985) identified the northern flying squirrel population in the Black Hills as a relict population. This would indicate support for isolation of this population by vicariance. This population likely followed the boreal forest southward and established itself in the Black Hills. With the retreat of the Wisconsin glacier, the continuous boreal forest became fragmented due to changing climatic conditions.

It is likely the northern flying squirrel population in the Black Hills forms its own subspecies, much like red squirrels (Ch. 8), based on microsatellite and mtDNA data. Arbogast et al. (2005) showed that the endangered Appalachian populations of *G. sabrinus* was evolutionarily distinct, with levels of genetic variability that are

substantially lower than those observed in conspecific populations. These data suggest that the northern flying squirrel population in the Black Hills and Bear Lodge Mountains be reclassified and/or maintained as its own subspecies.

CHAPTER 6: PARENTAGE OF AMERICAN RED SQUIRREL (*TAMIASCIURIUS HUDSONICUS*) POPULATIONS IN THE BLACK HILLS

INTRODUCTION

Parentage testing is used for many applications, such as kinship analysis, estimating inbreeding, speciation, identifying breed registries, and wildlife forensic analysis (Budowle et al. 2005). It can help to understand genetic exchange at a finer level and combine genetic understanding with field data. In addition, parentage testing (i.e., paternity testing) is feasible and even profitable for domestic livestock operations (Gomez-Raya et al. 2008) and is used for human identity testing in DNA forensic studies (Butler 2006). In complicated breeding systems, such as polygyny and polyandry, it may be difficult to determine parentage from direct observations (Birkhead and Moller 1992, Cockburn 1998). Parentage can be accurately determined through molecular methods, i.e. DNA profiling.

Currently, red squirrels (*Tamiasciurus hudsonicus*) are found in northern North America and parts of the Rocky Mountains (Hall 1981), including the Black Hills of South Dakota and Wyoming (Jones et al 1985) and northeastern South Dakota (Kiesow et al. 2007), although they do not appear to be restricted to this area historically (Turner 1974). The red squirrel population found in the Black Hills is apparently disjunct from populations in nearby mountain ranges (Jones et al. 1985, Steele 1998). As a result, South Dakota populations are designated as a separate subspecies *T. h. dakotensis* and considered endemic to this area (Hall 1959, Turner 1974).

Red squirrels select drey or cavity nests in coniferous areas with high canopy cover, decayed logs, and living trees (Merrick et al. 2007). Red squirrels are polyandrous and promiscuous with no male parental care. Females show high levels of mating of multiple males and little precopulatory mate selection (Lane et al. 2007). Spatial characteristics and resource abundance have the largest impact on female reproductive success, thus the female's ability to obtain and convert resources for offspring is a determinant for female reproductive success (Edelman and Koprowski 2006).

The breeding season often begins during the winter with the development of males' testes. In the late spring and summer, female pregnancy and lactation follow testes development (Vernes 2004). Red squirrels normally breed once a year in western North America (Pearson 2000).

The Black Hills red squirrels are polyandrous and form a separate subspecies, which presents an opportunity to study family groups through parentage testing in a distinct population. Accurate parentage analysis can address questions related to inbreeding avoidance and the benefits of mate choice (Richardson et al. 2001). Female red squirrels have high levels of multimale mating, and females do not bias copulations in favor of less genetically related males. Because female red squirrels show little to no overt precopulatory mate choice, understanding the relatedness of potential mated pairs in the Black Hills can help us understand inbreeding and its potential effects to squirrel populations in an isolated region. I predict inbreeding rates will be high due to relatedness of mates. I examined the parentage of the red squirrel population in the Black Hills using microsatellite markers. By studying family groups through genetic parentage

testing, I can examine the relatedness of mating pairs and elucidate which maternal-paternal pairs produced the most offspring in different regions throughout the Black Hills.

METHODS

Study Area, Sample Collection, and DNA Extractions

The Black Hills was chosen as a sample site for several reasons. The Black Hills are unique geological formations with many geological and topographical features, are isolated from nearby mountain ranges, and serve as home to many remnant species (Ch. 1). As a result, the Black Hills is an excellent study site for examining within-population genetic structure of an isolated population.

Sample sites, i.e., trap sites, were interspersed throughout the south, north, and central regions of the Black Hills from 2005 – 2007 (Figure 1.5, Ch. 1). Sites were selected based on previous sightings and suitable habitat. The south region was sampled from 9 May to 14 July 2005 and 11 – 18 August 2005, the north region was sampled from 10 May to 14 July 2006 and 15 – 25 August 2006, and the central region was sampled 10 May to 24 June 2007.

To collect samples, 20 Havahart® and/or Tomahawk© baited traps were placed in a line transect, with one trap per tree every 60 – 80 m. Bait included a mixture of peanut butter, bacon grease, and oatmeal. Traps were placed in trees in suitable habitat for up to 14 days and checked each morning during this period. Handling and capturing techniques were approved by the South Dakota State University Animal Care and Use Board.

Each captured red squirrel was weighed and classified as adult or juvenile. In addition, ear clippings were collected from captured individuals for genetic analysis. A total was 96 red squirrel samples (i.e., ear clippings) collected from the Black Hills in the north, central, and south regions (Table 6.1, Ch. 1). DNA was extracted from ear clippings using the DNeasy blood and tissue extraction kit (QIAGEN), using the manufacturer's instructions.

Table 6.1. Number of red squirrel samples collected from each region of the Black Hills.

Site	Number of Samples
North	18
Central	31
South	47
Total	96

Any trap mortalities were kept as vouchers specimens, stored in a -70ºC freezer, and used for stomach necropsies. These specimens were archived in the mammalian collection maintained at South Dakota State University.

Microsatellite Amplification

I used primers for 16 polymorphic microsatellite loci specifically developed for American red squirrels, as described in previously published literature: Thu03, Thu08, Thu14, Thu21, Thu23, Thu25, Thu31, Thu32, Thu33, Thu37, Thu38, Thu41, Thu42, Thu50, Thu55, and Thu59 (Gunn et al. 2005). Loci specific to red squirrels were amplified in 15 uL reactions containing 1.0 uL of (50 ng) genomic DNA, 0.5 uL of 10 uM forward primer, 0.5 uL of 10uM reverse primer, and 7.5 uL of 2X PCR Master Mix (Promega). The polymerase chain reaction (PCR) protocol was as follows: an initial a denaturing step of 94ºC for 2 min followed by 5 cycles of 94ºC for 1 min, 64ºC (-1ºC per

cycle) for 30 s, and 72ºC for 30 s then followed by 30 cycles of 94ºC for 1 min, 59ºC for 30 s, and 72ºC for 30 s with a final elongation step of 72ºC for 2 min (Gunn et al. 2005).

All microsatellite loci were amplified on a MJ Research PTC-200 thermocycler or a Bio-Rad MJ Mini thermocycler. Confirmation of PCR amplification was conducted by running a sample on a 1.5% agarose gel using SYBR® Green (Invitrogen) as a nucleic acid stain. Samples were multiplexed with five loci per sample and electrophoresed on an ABI PRISM Avant-3100 genetic analyzer, in which Liz-500 was used as a size-standard (Applied Biosystems). Each forward primer was fluorescently-labeled with VIC (green), PET (red), or 6-FAM (blue) dye (Applied Biosystems). Sizing for alleles for each locus was conducted using GeneMapper software (Applied Biosystems) and then transformed into a data matrix of all individuals and all loci.

Statistical Analysis

Descriptive statistics, including number of alleles and observed and expected heterozygosity levels, were obtained using GENEPOP 1.2 (Raymond and Rousset 1995). Tests for Hardy-Weinberg equilibrium and linkage disequilibrium were also conducted with GENEPOP 1.2 (Raymond and Rousset 1995). Micro-Checker (Oosterhout et al. 2004) was used to test for the presence of null alleles. Lastly, I used BayesAss to calculate F-statistics (i.e., F_{IS}) within subpopulations (Wilson and Rannala 2003) and F-STAT (Goudet 1995) to calculate F_{IS} within the overall population (i.e., combined subpopulations). F-statistics are reported in a 0 to 1 scale.

Cervus 3.0.3 (Marshall et al. 1998) was used to determine log-likelihood of parentage (LOD score) for each candidate parent within the Black Hills per region (i.e.,

south, north, and central). Likelihood equations take genotypic typing error into account, in which an error is defined as the replacement of the true genotype with a genotype selected at random under Hardy-Weinberg assumptions. A simulation of likelihood-based parentage inference was conducted using allele frequencies from 16 microsatellite loci from 96 red squirrels. Hardy-Weinberg equilibrium was taken into consideration by setting the minimum number of appropriately typed loci (i.e., those in HWE) to seven during the simulation. During the parentage simulation for red squirrels, I identified 50 candidate parents and assumed 75% of candidate parents were sampled, which were the program default values. The simulations determined the proportion of parentage tests that could be resolved with 80% confidence and 95% confidence. Candidate parents were identified as any adult squirrel in the sampled population, with sexes considered unknown. Sexes were identified as unknown because not all individuals collected in the Black Hills had sex identified, i.e., data were missing on the sex of the individual. Parentage may be assigned with confidence if the LOD score is high, usually values above zero. Critical trio LOD scores, which are the scores of both parents and the assigned offspring, were used for analysis. High LOD scores provide evidence for parentage and low LOD scores provide evidence against parentage (Morrissey and Wilson 2005).

I used ML-RELATE to estimate the relatedness among the most common parent pairs (those with five or more pairings) using maximum likelihood (Kalinowski et al. 2006). Coefficient of relatedness (*r*) was calculated, where values near one indicate related individuals and values near zero indicate unrelated individuals (Kalinowski et al.

2006). I compared relatedness between each subpopulation using a Kruskal-Wallis test in JMP-IN® 4.0 (SAS Institute Inc., Cary, North Carolina).

RESULTS

The number of alleles per locus range from 4 to 13. Expected and observed heterozygosity vary across loci, and all loci are polymorphic (Tables 6.2, 6.3). Several loci have observed heterozygosities in the north and/or south subpopulations below that shown in the total population (Figure 6.1). For example, observed heterozygosities in the north subpopulation are lower in loci Thu32, Thu37, Thu42, and Thu50 whereas observed heterozygosities in the south subpopulation are lower in loci Thu32, Thu38, and Thu42. Probability tests for Hardy-Weinberg equilibrium indicated a significant departure from equilibrium in nine loci (Thu3, Thu14, Thu23, Thu31, Thu33, Thu37, Thu41, Thu50, and Thu59; $P < 0.05$) in the overall population. Departure from equilibrium is the result of heterozygote deficiencies. In addition, linkage disequilibrium was detected between four pairs of loci (Thu3 and Thu21, Thu25 and Thu31, Thu3 and Thu33, Thu21 and Thu33, Thu33 and Thu55, Thu38 and Thu55, and Thu42 and Thu55; $P < 0.05$), or between 6%

Table 6.2. Microsatellite loci, repeat motif, primer sequence, allele sizes, and number of alleles (A) for red squirrels, as reported by Gunn et al. (2005).

Locus	Repeat motif (5' - 3')	Primer sequence (5' - 3')	Allele sizes (bp)	A	H_O	H_E
Thu03	$(TG)_5GG(GT)_{19}$	F: **VIC**-GTTTCCAAAAGCCATTCAGG R: TACAGAGACAAGATGGGCATATTAC	214-238	9	0.61	0.82
Thu08	$(GT)_{20}$	F: **PET**-CTCATTCCCCTGCTGCCTTC R: ACAGACCTTTCTTTGCCCTTGAA	226-318	8	0.70	0.77
Thu14	$(GT)_{22}$ AND $(GA)_{22}$	F: **FAM**-TAGCTAGCAAGCTGCCTCTC R: AAAGACTTTTATTAAGGTGCATTTTC	256-278	9	0.66	0.82
Thu21	$(GT)_4AT(GT)_{19}$	F: **FAM**-AATGAGAGGGCTCCACAGAG R: AACTCCACCTTCTCAGTCTGTTC	151-169	6	0.66	0.72
Thu23	$(AT)_8GCAT(AC)_{21}$	F: **FAM**-GCTACCCACTGTGACCCAAC R: TGTGACCATGGAACAGATGC	166-196	8	0.35	0.45
Thu25	$(AC)_3(TG)_{16}$	F: **PET**-ACCTGCTGCATTAGGACACAC R: GATGTAGCTTAATGGTGGAGCAC	175-195	4	0.43	0.47
Thu31	$(GT)_{24}$	F: **VIC**-GGCCCTTTTCCATGATGC R: AAAGCAGGTGGAACTCTGAGC	118-142	8	0.77	0.83
Thu32	$(CA)_{23}$	F: **PET**-GCACTTGGCTGGTACGTATG R: CCCCTTTTAAAACAATGACTGTTAC	255-289	7	0.20	0.20
Thu33	$(AC)_{19}$	F: **PET**-AGGATAAATAAGAGCGTTGATGC R: TCTAATCTGGCCTGAGAGATAGTG	133-167	13	0.39	0.78
Thu37	$(CAC)_2(AC)_8AA(AC)_5$	F: **VIC**-CTTGGGGTTGCAGATGTAGC R: AGTGGGGTGTGTAGCTCTGG	157-181	6	0.28	0.32
Thu38	$(AC)_{12}$	F: **VIC**-GATCCTCCTGCCTCCACTTC R: GCATTTTCTTCCGTGGACTG	288-298	4	0.51	0.55
Thu41	$(CA)_{11}$	F: **PET**-CAAACCAGCTCATTGTACAGC R: TCAGAACATTTCAGACTAAAGAATTG	221-275	6	0.21	0.36

Thu42	$(GT)_{18}(GA)_4$	F:**FAM**-TTGAACTGCCAAGTCAAAGG R: ACACGTTGGAACAGCATCTTG	228-270	8	0.77	0.79
Thu50	$(CA)_{16}$	F: **FAM**-ATTCCCAGCCCCCGCAAA R: TCCACCCCTTTGTTACTGTTTTCAA	269-295	6	0.39	0.52
Thu55	$(CA)_{17}$	F: **FAM**-TGTCAACCAGATGTTCAACG R: CTGCACTGTCCCTTTTCTTG	252-294	6	0.46	0.46
Thu59	$(GC)_8(AC)_{18}$	F: **FAM**-GATCTCCCCCGCGCGAGT R:GGCCCTGCCGACTGGTTTCT	80-120	9	0.55	0.78
			Mean	7.3	0.50	0.60

Table 6.3. Observed and expected heterozygosity per subpopulation.						
	South		North		Central	
	H_O	H_E	H_O	H_E	H_O	H_E
Thu03	0.70	0.52	0.82	0.62	0.72	0.74
Thu08	0.80	0.72	0.82	0.62	0.76	0.74
Thu14	0.70	0.54	0.86	0.82	0.78	0.74
Thu21	0.74	0.78	0.68	0.62	0.70	0.50
Thu23	0.54	0.46	0.38	0.28	0.36	0.24
Thu25	0.50	0.52	0.48	0.34	0.40	0.36
Thu31	0.82	0.80	0.84	0.72	0.78	0.74
Thu32	0.16	0.18	0.14	0.14	0.30	0.26
Thu33	0.66	0.36	0.80	0.34	0.84	0.52
Thu37	0.60	0.48	0.20	0.22	0.32	0.36
Thu38	0.32	0.20	0.58	0.50	0.48	0.54
Thu41	0.80	0.80	0.80	0.68	0.52	0.34
Thu42	0.38	0.36	0.40	0.42	0.78	0.74
Thu50	0.50	0.48	0.34	0.38	0.70	0.42
Thu55	0.78	0.54	0.66	0.42	0.48	0.48
Thu59	0.78	0.54	0.66	0.42	0.80	0.64
Mean	**0.61**	**0.52**	**0.59**	**0.47**	**0.61**	**0.52**

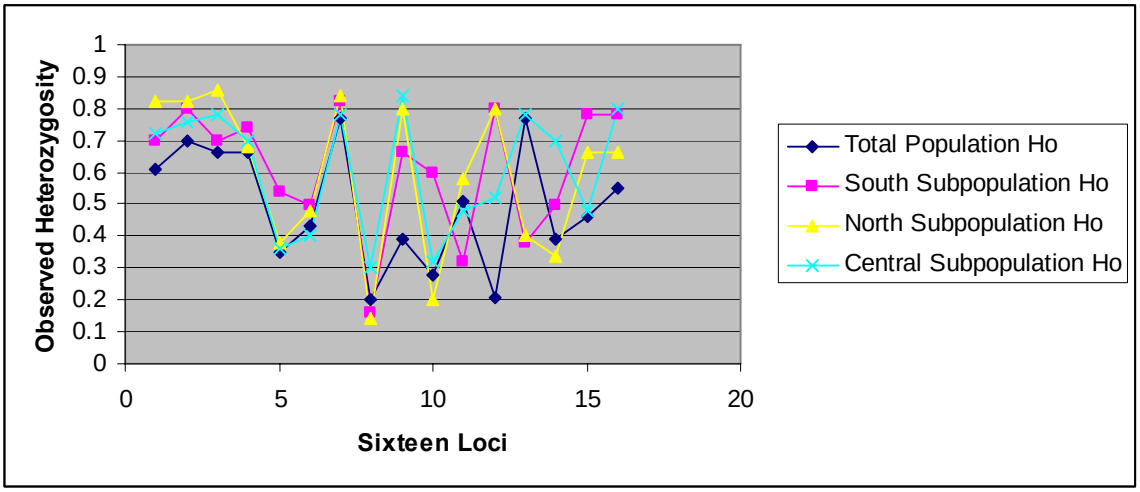

Figure 6.1. Observed heterozygosity in the total population and each subpopulation (south, north, and central). 1 = Thu03, 2 = Thu08, 3 = Thu14, 4 = Thu21, 5 = Thu23, 6 = Thu25, 7 = Thu31, 8 = Thu32, 9 = Thu33, 10 = Thu37, 11 = Thu38, 12 = Thu41, 13 = Thu42, 14 = Thu50, 15 = Thu55, and 16 = Thu59.

of all possible pairs of loci. Linkage disequilibrium is expected at low levels in populations (Hill and Robertson 1968).

Inbreeding rates of each subpopulation are as follows: 0.16 for the southern subpopulation, 0.50 for the northern subpopulation, and 0.15 for the central subpopulation. High inbreeding rates in the northern population is likely due to the small

numbers of red squirrels in the northern region due to lack of suitable red squirrel habitat. Not only were red squirrels less common in the region, but they were also concentrated in regions in which they were found. In the overall population (i.e., with all subpopulations combined) inbreeding is relatively low, 0.18.

Parentage analysis allowed us to assign maternity and paternity of offspring. I used all loci to calculate critical LOD values at the 80% and 95% confidence level. A total was 60 true parent pairs (i.e., mother-father pairings) assigned at the 80% confidence level whereas 59 true parent pair assignments were made at the 95% confidence level. There is little difference in pairings of true parents between the confidence levels, since patterns at the 80% confidence level are the same at the 95% confidence level (Marshall et al. 1998). However, more assignments are recognized at 80% confidence which may or may not be an accurate "snap shot" of the population.

The distribution of assigned (above -3) and excluded (-3 and below) parental pairs based on critical trio LOD scores is presented in Figure 6.2. There is no overlap between assigned and excluded parental pairs, suggesting that parent pair assignments are likely accurate (Richardson et al. 2001). Critical trio LOD scores above -3 indicate true parent pairs and in some cases non-parent pairs (Figure 6.2). Assignment of parent pairs at 80% confidence did not require positive values, since most LOD scores are negative. Thus, LOD scores above -3 assigned 70% of the individuals to a parent pair.

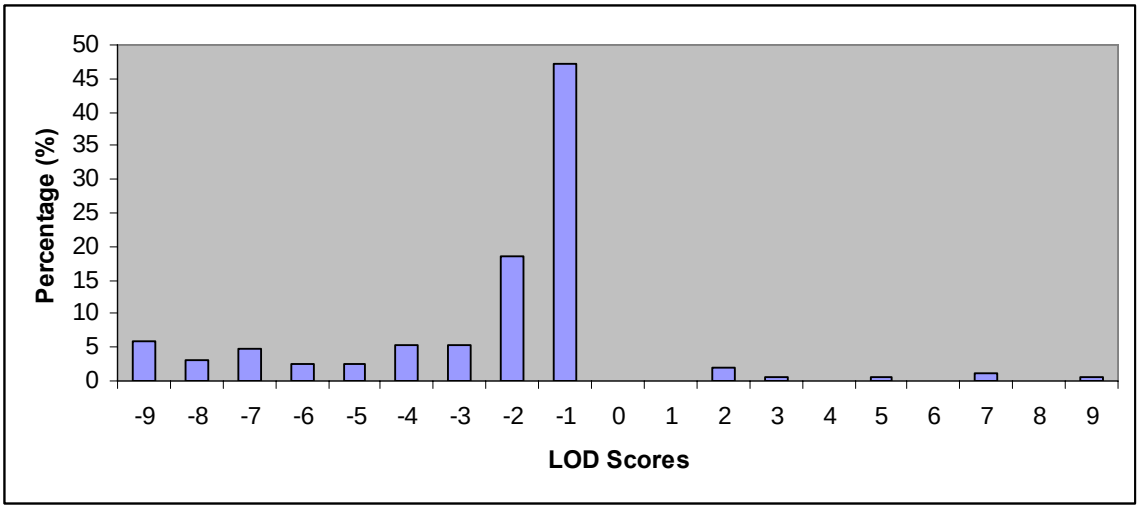

Figure 6.2. LOD scores for assigned (above -3) and excluded (-3 and below) parent pairs.

Parent pairs with critical LOD scores above zero were examined in more detail because LOD scores above zero identified true parent pairs with the greatest statistical support (Figure 6.3, Table 6.4). No parent pairs from the northern Black Hills were identified when using LOD scores above zero, possibly due to the low sample size. Therefore, the central and southern subpopulations likely have more recruitment and thus provide more migrants for other subpopulations than the northern subpopulation.

In testing these parent pairs for relatedness, values differ per parent pair. And, there is no significant difference ($p > 0.05$) in relatedness between subpopulations. Of the pairs tested, 13BH-3BH and 13BH-43BH are most related, with a coefficient of relatedness of 0.34 and 0.30, respectively. Interestingly, the pairs that are most closely related are located in the southern Black Hills, which suggests that there are more pairings between relatives in the south and thus more inbreeding in the southern subpopulation. This may result from higher squirrel densities in this region versus other regions.

It is difficult to predict whether polyandry or polygyny was shown because sexes were considered unknown (i.e., based on lack of data). However, several of the pairs

show one parent in common, e.g., 80BH, 66BH, and 13BH, which would suggest polyandry or polygyny are present in the population.

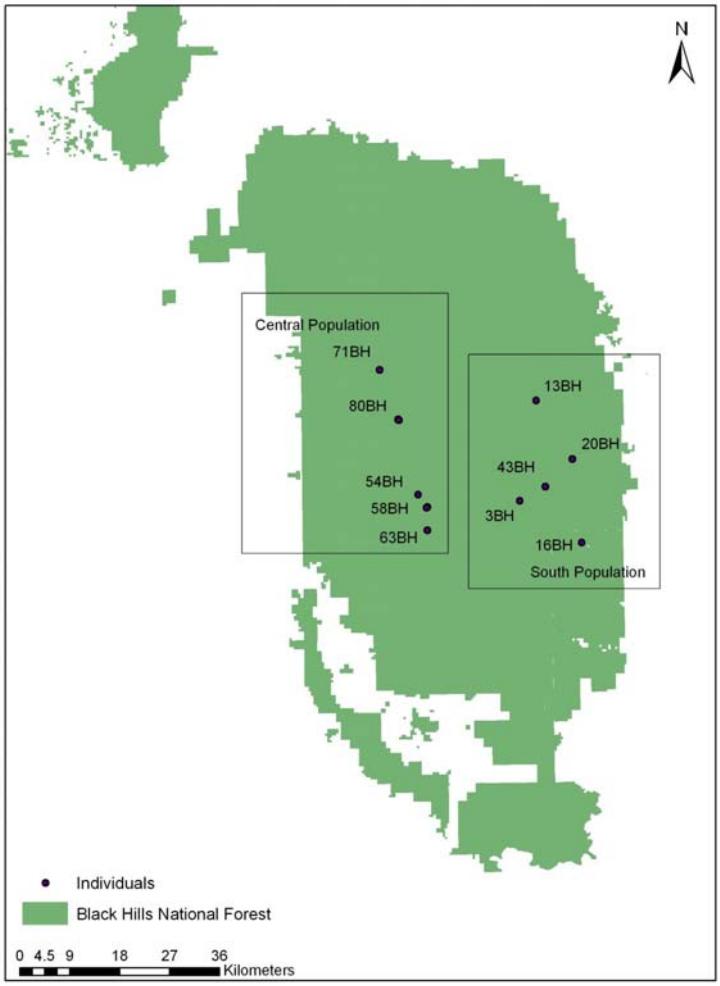

Figure 6.3. Common parent pairs with LOD scores zero or above as determined by parentage testing.

Table 6.4. Coefficient of relatedness of red squirrel parent pairs. Bolded parents indicate those with multiple mates.

	Parent 1	Parent 2	Coefficient of Relatedness (*r*)
Central	71BH	**80BH**	0.00
	76BH	**80BH**	0.10
	54BH	58BH	0.00
	61BH	65BH	0.14
	66BH	63BH	0.10
	66BH	80BH	0.06
South	16BH	20BH	0.08
	13BH	3BH	**0.34**
	13BH	43BH	**0.30**

DISCUSSION

The Black Hills red squirrel population is isolated from other nearby populations in North America, and population genetic characteristics are typical of an isolated population. Some of these genetic characteristics include low heterozygosity and potential loss of genetic variation. Several loci show low heterozygosity. Low heterozygosity indicates an absence of genetic variation (Menken 1987) and can have a deleterious effect on population fitness (Reed and Frankham 2003). Small populations of Eurasian red squirrels have low genetic variation (Wauters et al. 1994), which if often a result of low heterozygosity (Platz and Grudzien 2003). Reduced immigration (or lack of gene flow) often is the cause for lost genetic variation (Wauters et al. 1994).

A population with allelic variation at all loci is considered to be in Hardy-Weinberg equilibrium (Platz and Grudzien 2003). Therefore, genotypes in the subpopulations in the Black Hills do not adhere to Hardy-Weinberg expectations. However, when using microsatellites, a deficit of heterozygotes may be due to non-amplifying alleles (null alleles). Nine loci specific to red squirrels probably had null alleles, which could cause the high levels of homozygotes in the Black Hills population.

Thus, departure from equilibrium could result from lack of genetic variation or the presence of null alleles.

Populations with higher inbreeding usually have inbreeding avoidance mechanisms thereby minimizing the effects of inbreeding. Genetic similarity of mates does not predict patterns of parentage in red squirrels; there appears to be no negative fitness repercussions to inbreeding (Lane et al. 2007). Relatedness among red squirrel in the Black Hills was ~0.5, which indicates mates are related. However, the southern subpopulation, in particular, shows a higher observed heterozygosity than expected in 81% of the loci examined and low inbreeding rate, which suggests that although some parent pairs may be related there is little impact on overall genetic variability. Even though high relatedness does not appear to affect red squirrels fitness, there may be a slight selective benefit to bias mates in favor of dissimilar individuals. The Black Hills red squirrel population still suffers from low heterozygosity, which appears to have little impact on red squirrel reproductive abilities.

Excess of homozygosity can likely be explained by founder events that occurred in the Black Hills red squirrel population during the late Pleistocene (Ch. 1). The population of red squirrels was likely restricted to the Black Hills, where there was remaining suitable habitat. This led to the isolation of this population and thus lack of genetic exchange due to the reduced population size, loss of alleles, and potential to inbreed. The overall inbreeding rate for red squirrels in the Black Hills is 0.18 (F_{IS} between subpopulations), which is relatively low. However, inbreeding in the northern subpopulation is rather high, 0.5 (F_{IS} within subpopulations). Inbreeding reduces reproductive fitness thereby affecting population fitness (Reed and Frankham 2003). For

example, an island population of the black-footed rock-wallaby (*Petrogale lateralis*) suffers from inbreeding depression due to genetic factors (Eldridge et al. 1999), and inbreeding in island populations is associated with high rates of extinction. Thus, genetic diversity is conserved by allowing dissimilar individuals within populations to mate, which is important for evolution and the improvement of population fitness (Reed and Frankham 2003).

The relatively low genetic variability meant that it was impossible to directly resolve the parentage of red squirrels without using knowledge related to the ecology of the species in cooperation with the parental assignment procedure. Previous studies suggest that ecological population dynamics rather than genetic problems are the main concern in small squirrel populations (Wauters et al. 1994), thus taking ecology into consideration is important. Parent pairs were assigned per subpopulation, in which mother-father pairs were established within subpopulations (i.e., north, south, central regions). Furthermore, because sexes were designated as unknown, resolving the true parentage of these subpopulations presents further difficulty. In spite of this, sixty parent pairs were assigned at a high confidence.

Patterns of parentage in some vertebrates can be influenced by the genetic relatedness of mates (Lane et al. 2007). In the central and south subpopulations in which parent pairs are assigned, red squirrels are found in higher densities and are restricted in their dispersal. Inbreeding may result from the restricted dispersal of individuals, which could result from habitat distribution and topography of the Black Hills. Genetic relatedness and parentage patterns may be influenced by the historical degree of inbreeding in a population, in which small, isolated populations or highly polygynous or

polyandrous populations are more vulnerable to inbreeding depression (Keller and Waller 2002). In the Black Hills, inbreeding in the overall population is low, with the exception of the northern subpopulation. Moreover, relatedness of common parent pairs in most cases is relatively low, thereby indicating that restricted dispersal may not have a negative impact on reproductive strategies.

Red squirrels in the Black Hills have relatively low heterozygosity, a low inbreeding rate, and (in some cases) parents with multiple mates. The south and central regions likely provide more recruitment and migrants for other areas of the Black Hills due to the well established parent pairs in these regions. In addition, red squirrels are likely polyandrous in the Black Hills. All these characteristics are similar to that found in other red squirrel populations.

CHAPTER 7: GENETIC STRUCTURE AND LANDSCAPE GENETICS OF AMERICAN RED SQUIRREL (*TAMIASCIURIUS HUDSONICUS*) POPULATIONS FROM THE BLACK HILLS

INTRODUCTION

Understanding gene flow is important in conservation genetics because gene flow can be used to look into fine-scale genetic structure (e.g., inbreeding), dispersal of individuals, and overall genetic structure as it compares to geographic characteristics (Ishihama et al. 2005). Mammalian populations that are strongly substructured are either separated by barriers (e.g., topographic or vegetative) or belong to terrestrial species with low dispersal abilities (Miller-Butterworth et al. 2003). To examine substructure in a terrestrial species, I selected a unique and isolated land formations – called the Black Hills – and a species, i.e., the red squirrel, presumably found throughout this region.

The Black Hills are one of the oldest formations in North America that were formed as a result of a series of uplifts starting in the Pre-Cambrian Period and ending in the Pleistocene (Froiland 1978). These uplifts occurred as the central dome of the Black Hills was pushed up from beneath thereby exposing geological layers, in a pattern where the newest layers are seen on the outside and the oldest layers are seen in the center (Froiland 1978). These geological layers affect the patterning of vegetation in the Black Hills.

The Black Hills flora is mixture of coniferous (e.g., ponderosa pine) and deciduous (e.g., aspen and birch) forests and grassland vegetation (Ch. 1). As a result of soil characteristics, high amounts of precipitation, and cool temperatures, the northern

Black Hills is comprised of a combination of deciduous and coniferous forests, the central Black Hills is transitional (having characteristics similar to the northern and southern Black Hills), and the southern Black Hills is primarily coniferous forests (Ch. 1). In the Black Hills, red squirrels are found in forests primarily consisting of pine trees (i.e., *Pinus* spp.), such as that found in the southern Black Hills (M. Hough pers. comm.).

Currently, red squirrels (*Tamiasciurus hudsonicus*) are distributed throughout northern North America and parts of the Rocky Mountains (Hall 1981), including the Black Hills. Red squirrels are limited to the dense ponderosa pine forests of the Black Hills (Jones et al. 1985), where they are isolated from other mountain ranges possibly dating to the late Pleistocene (~10,000 years ago). As such, red squirrel populations in South Dakota are designated as a separate subspecies *T. h. dakotensis*, suggesting that this species is unique to the Black Hills region (Hall 1959, Turner 1974) and making it an ideal study population.

Red squirrel populations are dispersed in suitable habitat throughout the Black Hills. Due to the heterogeneity of the vegetative habitat in the Black Hills, red squirrels are found in higher densities in the southern and central Black Hills, where habitat is more suitable. Being a habitat specialist, the red squirrel is an ideal model for studying the effects of forest fragmentation on population genetics and demography (Wauters et al. 1994, Hale et al. 2001). There are potential barriers to gene flow between subpopulations within the Black Hills, which may cause genetic substructuring of the population into three regions (north, central, and south). For example, the east-central portion of the Black Hills is composed of exposed granite and the central region contains large areas of continuous grasslands, which causes geological and vegetative barriers to

gene flow. Subpopulations are likely restricted to different regions of the Black Hills and may be comprised of related individuals. I used microsatellite markers to examine the overall genetic structure of red squirrels in the Black Hills and whether geographical barriers and patterns of migration may impact their population structure.

METHODS

Study Area, Sample Collection, and DNA Extractions

The Black Hills was chosen as a sample site for several reasons. The Black Hills are unique geological formations with many geological and topographical features, are isolated from nearby mountain ranges, and serve as home to many remnant species (Ch. 1). As a result, the Black Hills is an excellent study site for examining within-population genetic structure of an isolated population.

Sample sites, i.e., trap sites, were interspersed throughout the south, north, and central regions of the Black Hills from 2005 – 2007 (Figure 1.5, Ch. 1). Sites were selected based on previous sightings and suitable habitat. The south region was sampled from 9 May to 14 July 2005 and 11 – 18 August 2005, the north region was sampled from 10 May to 14 July 2006 and 15 – 25 August 2006, and the central region was sampled 10 May to 24 June 2007.

To collect samples, 20 Havahart® and/or Tomahawk© baited traps were placed in a line transect, with one trap per tree every 60 – 80 m. Bait included a mixture of peanut butter, bacon grease, and oatmeal. Traps were placed in trees in suitable habitat for up to 14 days and checked each morning during this period. Handling and capturing

techniques were approved by the South Dakota State University Animal Care and Use Board.

Each captured red squirrel was weighted and classified as adult or juvenile. In addition, ear clippings were collected from captured individuals for genetic analysis. A total was 96 red squirrel samples (i.e., ear clippings) collected from the Black Hills in the north, central, and south regions (Table 7.1, Ch. 1). DNA was extracted from ear clippings using the DNeasy blood and tissue extraction kit (QIAGEN), using the manufacturer's instructions.

Table 7.1. Number of red squirrel samples collected from each region of the Black Hills with information (i.e., alleles. % polymorphic loci, and observed heterozygosity [H_O] and expected heterozygosity [H_E]) regarding fitness of each subpopulation.

Site	Number of Samples	Mean No. of Alleles	% of Polymorphic Loci	H_O, H_E
North	18	4.8	100%	0.59, 0.47
Central	31	5.6	100%	0.61, 0.52
South	47	5.6	100%	0.61, 0.52
Total	96	5.3	100%	0.50, 0.60

Any trap mortalities were kept as vouchers specimens, stored in a -70ºC freezer, and used for stomach necropsies. These specimens were archived in the mammalian collection maintained at South Dakota State University.

Microsatellite Amplification

I used primers for 16 polymorphic microsatellite loci specifically developed for American red squirrels, as described in previously published literature: Thu03, Thu08, Thu14, Thu21, Thu23, Thu25, Thu31, Thu32, Thu33, Thu37, Thu38, Thu41, Thu42, Thu50, Thu55, and Thu59 (Table 7.2, Gunn et al. 2005). Loci specific to red squirrels were amplified in 15 uL reactions containing 1.0 uL of (50 ng) genomic DNA, 0.5 uL of 10 uM forward primer, 0.5 uL of 10uM reverse primer, and 7.5 uL of 2X PCR Master

Table 7.2. Microsatellite loci, repeat motif, primer sequence, allele sizes, and number of alleles (A) for red squirrels, as reported by Gunn et al. (2005).

Locus	Repeat motif (5' - 3')	Primer sequence (5' - 3')	Allele sizes (bp)	A	H_O	H_E
Thu03	$(TG)_5GG(GT)_{19}$	F: **VIC**-GTTTCCAAAAGCCATTCAGG R: TACAGAGACAAGATGGGCATATTAC	214-238	9	0.61	0.82
Thu08	$(GT)_{20}$	F: **PET**-CTCATTCCCCTGCTGCCTTC R: ACAGACCTTTCTTTGCCCTTGAA	226-318	8	0.70	0.77
Thu14	$(GT)_{22}$ AND $(GA)_{22}$	F: **FAM**-TAGCTAGCAAGCTGCCTCTC R: AAAGACTTTTATTAAGGTGCATTTTC	256-278	9	0.66	0.82
Thu21	$(GT)_4AT(GT)_{19}$	F: **FAM**-AATGAGAGGGCTCCACAGAG R: AACTCCACCTTCTCAGTCTGTTC	151-169	6	0.66	0.72
Thu23	$(AT)_8GCAT(AC)_{21}$	F: **FAM**-GCTACCCACTGTGACCCAAC R: TGTGACCATGGAACAGATGC	166-196	8	0.35	0.45
Thu25	$(AC)_3(TG)_{16}$	F: **PET**-ACCTGCTGCATTAGGACACAC R: GATGTAGCTTAATGGTGGAGCAC	175-195	4	0.43	0.47
Thu31	$(GT)_{24}$	F: **VIC**-GGCCCTTTTCCATGATGC R: AAAGCAGGTGGAACTCTGAGC	118-142	8	0.77	0.83
Thu32	$(CA)_{23}$	F: **PET**-GCACTTGGCTGGTACGTATG R: CCCCTTTTAAAACAATGACTGTTAC	255-289	7	0.20	0.20
Thu33	$(AC)_{19}$	F: **PET**-AGGATAAATAAGAGCGTTGATGC R: TCTAATCTGGCCTGAGAGATAGTG	133-167	13	0.39	0.78
Thu37	$(CAC)_2(AC)_8AA(AC)_5$	F: **VIC**-CTTGGGGTTGCAGATGTAGC R: AGTGGGGTGTGTAGCTCTGG	157-181	6	0.28	0.32
Thu38	$(AC)_{12}$	F: **VIC**-GATCCTCCTGCCTCCACTTC R: GCATTTTCTTCCGTGGACTG	288-298	4	0.51	0.55
Thu41	$(CA)_{11}$	F: **PET**-CAAACCAGCTCATTGTACAGC R: TCAGAACATTTCAGACTAAAGAATTG	221-275	6	0.21	0.36

Thu42	$(GT)_{18}(GA)_4$	F:**FAM**-TTGAACTGCCAAGTCAAAGG R: ACACGTTGGAACAGCATCTTG	228-270	8	0.77	0.79
Thu50	$(CA)_{16}$	F: **FAM**-ATTCCCAGCCCCCGCAAA R: TCCACCCCTTTGTTACTGTTTTCAA	269-295	6	0.39	0.52
Thu55	$(CA)_{17}$	F: **FAM**-TGTCAACCAGATGTTCAACG R: CTGCACTGTCCCTTTTCTTG	252-294	6	0.46	0.46
Thu59	$(GC)_8(AC)_{18}$	F: **FAM**-GATCTCCCCCGCGCGAGT R:GGCCCTGCCGACTGGTTTCT	80-120	9	0.55	0.78
			Mean	7	0.50	0.60

Mix (Promega). The polymerase chain reaction (PCR) protocol was as follows: an initial a denaturing step of 94ºC for 2 min followed by 5 cycles of 94ºC for 1 min, 64ºC (-1ºC per cycle) for 30 s, and 72ºC for 30 s then followed by 30 cycles of 94ºC for 1 min, 59ºC for 30 s, and 72ºC for 30 s with a final elongation step of 72ºC for 2 min (Gunn et al. 2005).

All microsatellite loci were amplified on a MJ Research PTC-200 thermocycler or a Bio-Rad MJ Mini thermocycler. Confirmation of PCR amplification was conducted by running a sample on a 1.5% agarose gel using SYBR® Green (Invitrogen) as a nucleic acid stain. Samples were multiplexed with five loci per sample and electrophoresed on an ABI PRISM Avant-3100 genetic analyzer, in which Liz-500 was used as a size-standard (Applied Biosystems). Each forward primer was fluorescently-labeled with VIC (green), PET (red), or 6-FAM (blue) dye (Applied Biosystems). Sizing for alleles for each locus was conducted using GeneMapper software (Applied Biosystems) and then transformed into a data matrix of all individuals and all loci.

Statistical Analysis

Substructure of Black Hills populations was examined using the Bayesian cluster approach implemented in the software STRUCTURE 2.0 (Pritchard et al. 2000). A Markov chain Monte Carlo (MCMC) algorithm was used where individual genotypes were assigned to a predefined number of clusters. Three runs were performed at each value of the fixed parameter K (clusters or subpopulations), from $K = 1$ TO $K = 5$ to determine which value of K is the best estimate. Each run consisted of 100,000 replicates after a burn-in of 10,000 replicates, used the admixture model, and allowed the allele frequencies to be correlated among subpopulations. The highest mean likelihood was

used as an estimate of *K*. Once the most likely number of subpopulations (or *K*) was determined, individuals were assigned to subpopulations by performing one longer run (100,000 burn-in and 500,000 replicates) at the inferred *K* to obtain better *q* value estimates. Alpha (α) values were used to imply structure or admixture. Small alpha values (i.e., < 1) imply that individuals are essentially from one population or another (Pritchard et al. 2000). Values of *q*, the proportion of an individual's sampled genome characteristic of each subpopulation, were used to assign individuals to subpopulations. Individuals were unambiguously assigned to a single subpopulation when *q* values were greater than 0.5, as suggested by previous studies.

Population structure, i.e., subpopulations, can be detected using GENELAND (Guillot et al. 2005), which uses individual multilocus genetic data, such as microsatellite loci. This program can also delineate spatial domains of populations, which assists in estimating population membership. As a result, genotypic (loci) and geographic (UTM coordinates) data were input into GENELAND to detect population structure and spatial relationships. Panmictic and isolation by distance (IBD) simulations were also conducted to examine spatial relationships among subpopulations. During the simulations, three populations and nuclei in tessellation were designed.

Principal component analysis (PCA) was used to analyze geographic patterns among subpopulations. I used PCAGEN (J. Goudet) to perform PCA using 10 loci. PCA is a method used to describe patterns among populations in multidimensional space in which axes (in this space) are sequentially aligned in the greatest direction of variance and covariance among loci (Morrison 1990). PCA can be used to generate hypotheses about population structure.

Arlequin 3.11 (Schneider et al. 2000) was used to quantify hierarchical patterns of genetic structure among subpopulations in the Black Hills. Data were organized such that individuals were incorporated into subpopulations (i.e., north, south, central) based on collection sites and subpopulations were grouped into the total population. Analyses of data included AMOVA (analysis of molecular variance), F-statistics (i.e., F_{ST}), Hardy-Weinberg equilibrium, and linkage disequilibrium. Statistical differences between sites were tested using F_{ST}, and the proportion of the structure was assessed with AMOVA. In addition, I used BayesAss to calculate F-statistics (i.e., F_{IS}) within subpopulations (Wilson and Rannala 2003) and F-STAT (Goudet 1995) to calculate F_{IS} within the overall population (i.e., combined subpopulations). F-statistics are reported in a 0 to 1 scale.

Isolation by distance analysis was conducted using GENEPOP 1.2 based on sample sites (Raymond and Rousset 1995). Pairwise distances (F_{ST}) between samples sites from AMOVA were converted to $F_{ST}/(1-F_{ST})$ values and compared to the ln (distance) of the UTM location per sample site. The variation of $F_{ST}/(1-F_{ST})$ with distance contains the most easily interpretable information (Rousett 1997). Euclidean distances were calculated in kilometers between UTM locations. Mantel tests were performed with converted F_{ST} distance and Euclidean distance matrices with 1,000 permutations.

I used MIGRATE 2.0 (Beerli and Felsenstein 2001) to calculate effective population size with mutation rate (θ) and migration rates (M) of each squirrel subpopulation using maximum likelihood estimates. MIGRATE uses a MCMC approach to use genotype frequencies and obtain migration estimates (Beerli 2006). The parameters used for the estimates were: 10 short chains and 10,000 sampled geneologies,

3 long chains and 100,000 sampled geneologies, with a burn-in of 10,000 and an increment of 20, which were program default values and recommended for runs. Values of θ are constant for each population but vary across subpopulations, and mutation rates are constant for all loci. I also used BayesAss to calculate migration rates and F-statistics (i.e., F_{IS}) within subpopulations (Wilson and Rannala 2003). BayesAss also uses a MCMC approach but uses allelic frequencies to obtain migration estimates. Parameters were as follows: number of iterations was 3,000,000, of which 999,999 are burn-in, and the sampling frequency was 2,000, again, which were program default values. Estimates of migration from MIGRATE are interpreted as migration over several generations (~1,000 or more years), whereas BayesAss migration rates are interpreted as very recent gene flow between populations.

RESULTS

Population substructuring is most probable when $K = 3$, based on likelihood and alpha values. This indicates that there may be three subpopulations in the Black Hills. There appears to be weak structure between the subpopulations in red squirrels, as indicated by slight unequal probability of the program assignment of individuals (Figure 7.1, Table 7.3). Alpha is relatively low, 0.1; low alpha values indicate that there is likely some substructure in a population (Pritchard et al. 2000). Population assignment based on q values indicates that the central subpopulation, due to 100% correct assignment, may be separated from the north and south subpopulations (Table 7.4). Assignment in the south and north subpopulations is not as apparent or accurate, only 40 – 50%. This suggests that the north and south subpopulations may be operating as one subpopulation

or the designation of north and south subpopulations may be different than expected. Most individuals are concentrated in the southern and central Black Hills due to suitable habitat, thus one would expect red squirrel substructure to exist in one of these regions. However, the substructure found, if any, is weak at best.

Table 7.3. Likelihood and alpha values from STRUCTURE analysis. Bolded is the best estimate of *K*.

K	ln	alpha
1	-3922	na
2	-3800	1.7
3	**-3675**	**0.1**
4	-3707	1.2
5	-3677	1.0

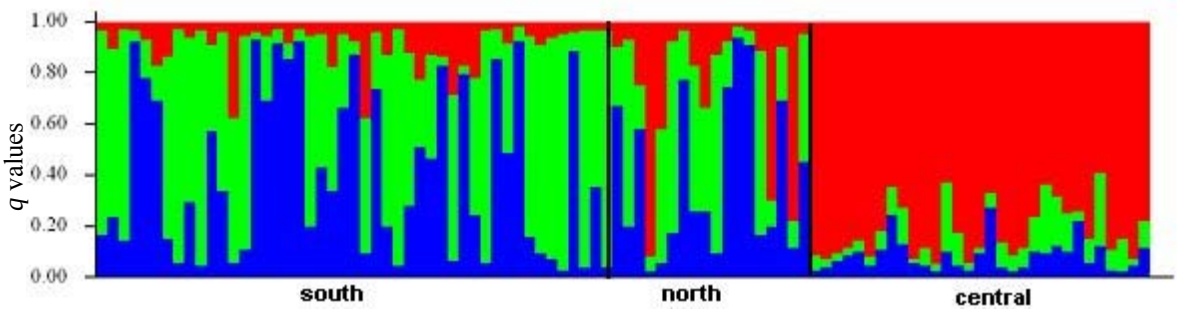

Figure 7.1. Red squirrel subpopulation structure from the Black Hills, in which the three colors represent the clusters.

Table 7.4. Population assignment of red squirrels, in which 1, 2, and 3 represent clusters, as estimated by STRUCTURE. Bolded are the best assignment per cluster.

	1	**2**	**3**
south	0 (0%)	**27 (57%)**	20 (43%)
north	3 (17%)	7 (39%)	**8 (44%)**
central	**31 (100%)**	0 (0%)	0 (0%)

GENELAND estimated between 2 and 7 subpopulations in the red squirrel population, with 2 subpopulations having the highest proportion in Hardy-Weinberg equilibrium (~0.65). The probability that a sample belongs to a particular subpopulation ranges from 40 to 50%, based on spatial distributions of multilocus genotypes, suggesting

geographical boundaries impede genetic exchange (Figure 7.2). Moreover, the north and south subpopulations (~50%) have a higher probability of assignment than the central subpopulation.

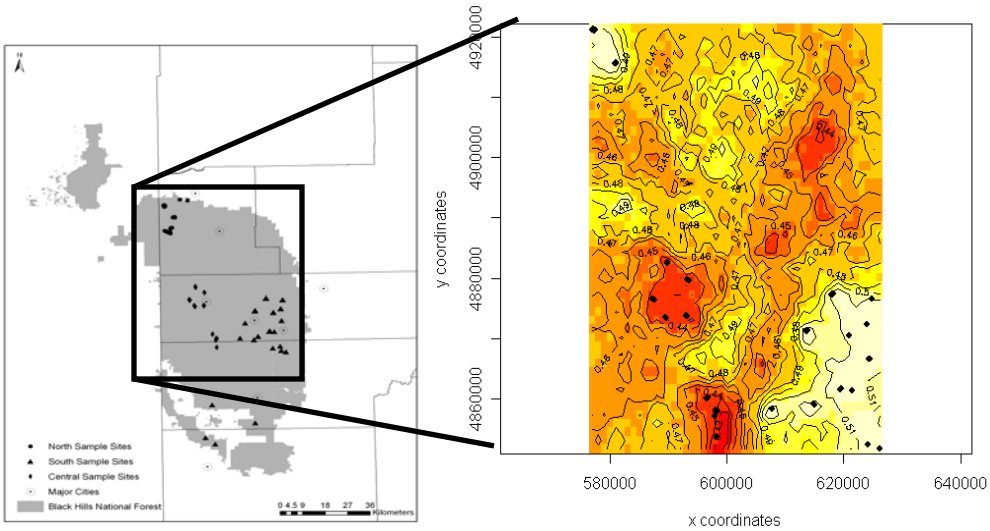

Figure 7.2. The right diagram shows the posterior probability of each sample for red squirrels, which displays population membership. Tessellations for the spatially explicit GENELAND analysis indicate the probability that a sample belongs to a particular subpopulation ranging from low (dark color) to high (light color).

The PCA shows that individuals from the central subpopulation are clustered together (Figure 7.3). However, this is relatively weak structure according to low weightings on PCI (6.23%) and PCII (7.60%). Individuals from north and south do not show an affinity to these regions, whereas individuals from the central region seem to show a slight affinity to this region. However, numbers are greatest in the south and central regions.

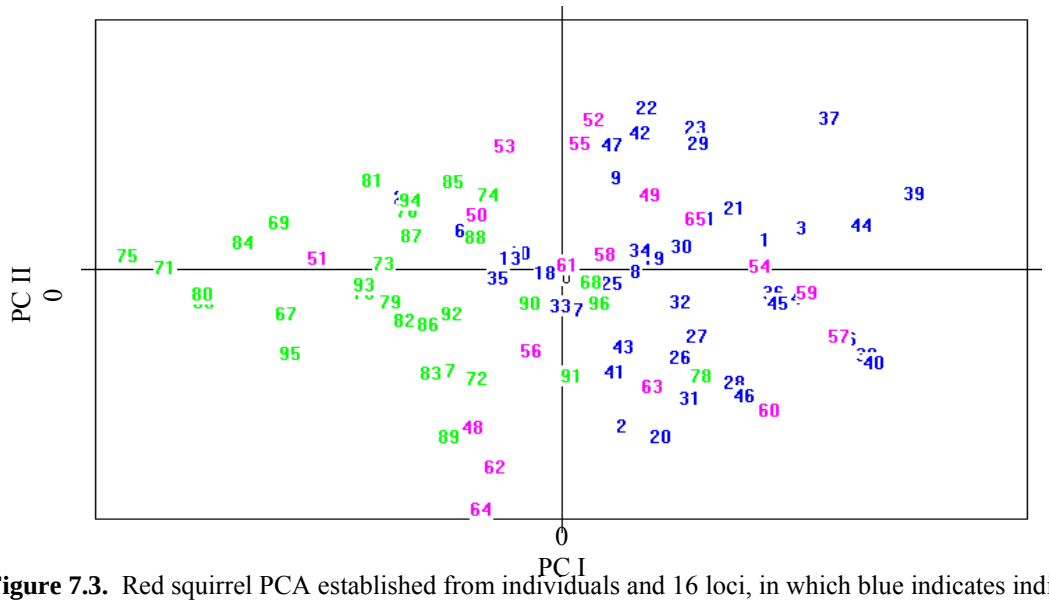

Figure 7.3. Red squirrel PCA established from individuals and 16 loci, in which blue indicates individuals from the south, pink indicates individuals from the north, and green indicates individuals from the central regions of the Black Hills.

Red squirrel subpopulations also have a low F_{ST} (0.03), suggesting high gene flow within the overall population. However, pairwise F_{ST} estimates were significant between the south and north subpopulations and the north and central subpopulations of red squirrels when subpopulations were designated prior to analyses (Table 7.5). Inbreeding rates (i.e., F_{IS}) of each subpopulation are as follows: 0.16 for the southern subpopulation, 0.50 for the northern subpopulation, and 0.15 for the central subpopulation. In the overall population (i.e., with all subpopulations combined) inbreeding is relatively low, 0.18. Observed heterozygosity is lower than expected heterozygosity in 19% of the loci in the northern subpopulation, and only four loci are lower than the overall population heterozygosity, which suggests that low heterozygosity may not impact the red squirrel population (Table 7.6, Figure 7.4). Finally, AMOVA revealed that 3.39% ($p < 0.05$) of the microsatellite variation is observed among populations, 10.21% of the variation is observed among individuals within subpopulations, and 86.31% ($p < 0.05$) of the variation is observed within individuals.

Table 7.5. Pairwise FST estimates between subpopulations. Bolded numbers are significant.		
	south	north
north	**0.01**	
central	**0.06**	0.03

Table 7.6. Observed and expected heterozygosity per subpopulation. Bolded are values that are statistically significant ($p < 0.05$).						
	South		North		Central	
	H_O	H_E	H_O	H_E	H_O	H_E
Thu03	0.7	0.52	0.82	0.62	0.72	0.74
Thu08	0.8	0.72	0.82	0.62	0.76	0.74
Thu14	0.7	0.54	0.86	0.82	0.78	0.74
Thu21	0.74	0.78	0.68	0.62	0.7	0.5
Thu23	0.54	0.46	0.38	0.28	0.36	0.24
Thu25	0.5	0.52	0.48	0.34	0.4	0.36
Thu31	0.82	0.8	0.84	0.72	0.78	0.74
Thu32	0.16	0.18	0.14	0.14	0.3	0.26
Thu33	0.66	0.36	0.8	0.34	0.84	0.52
Thu37	0.6	0.48	0.2	0.22	0.32	0.36
Thu38	0.32	0.2	0.58	0.5	0.48	0.54
Thu41	0.8	0.8	0.8	0.68	0.52	0.34
Thu42	0.38	0.36	0.4	0.42	0.78	0.74
Thu50	0.5	0.48	0.34	0.38	0.7	0.42
Thu55	0.78	0.54	0.66	0.42	0.48	0.48
Thu59	0.78	0.54	0.66	0.42	0.8	0.64
Mean	**0.61**	**0.52**	**0.59**	**0.47**	**0.61**	**0.52**

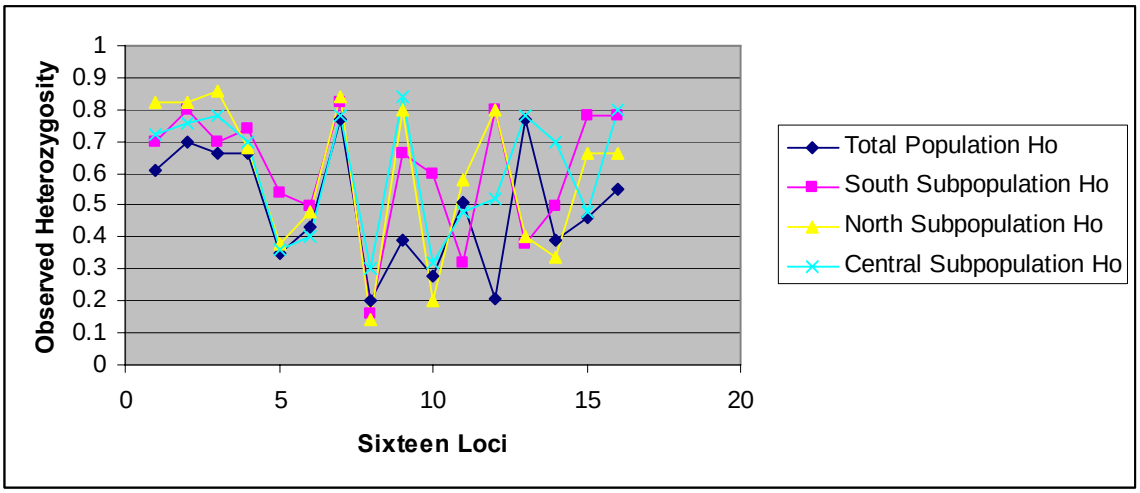

Figure 7.4. Observed heterozygosity in the total population and each subpopulation (south, north, and central). 1 = Thu03, 2 = Thu08, 3 = Thu14, 4 = Thu21, 5 = Thu23, 6 = Thu25, 7 = Thu31, 8 = Thu32, 9 = Thu33, 10 = Thu37, 11 = Thu38, 12 = Thu41, 13 = Thu42, 14 = Thu50, 15 = Thu55, and 16 = Thu59.

I used both the panmictic and IBD models to test for isolation by distance. Both models show similar results, in which there is no isolation by distance of individuals.

Based on sample sites, as sites become farther apart (in geographical distance), they seem to exchange fewer genes (slope = 0.014, r^2 = 0.004, p = 0.75; Figure 7.5).

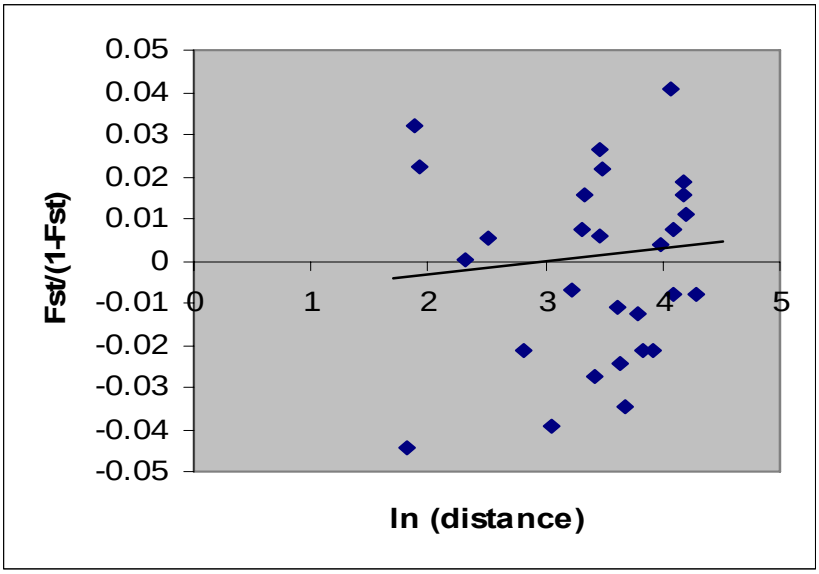

Figure 7.5. Multilocus estimates of pairwise differentiation are plotted against distance. Differentiation among red squirrels based on sample sites.

Theta (θ), a measure of effective population size and mutation rate, values of the subpopulations of red squirrels from the southern, northern, and central Black Hills are 2.17 (95% CI = 2.12, 2.22), 1.35 (95% CI = 1.31, 1.39), and 4.11 (95% CI = 3.96, 4.26), respectively (Table 7.7). Migration is asymmetrical between subpopulations in the Black Hills. Immigration rates range from 1.56 to 4.26, with the highest immigration occurring from the southern into the central subpopulation and the lowest immigration occurring from the central into the northern subpopulation (Table 7.7, Figure 7.6). BayesAss also shows asymmetry between subpopulations. Migration rates ranged from 0.004 to 0.26, with the highest immigration occurring from the southern into the northern subpopulation and lowest immigration occurring from the northern into the southern subpopulation (Table 7.7, Figure 7.6). The two programs slightly differ in migration patterns between

subpopulations however both programs show the importance of the south subpopulation as a contributor of migrants into the central and/or northern subpopulations (Table 7.7).

Table 7.7. Migration, according to MIGRATE, in northern flying squirrels from the Black Hills, in which 1 represents the southern subpopulation, 2 represents the northern subpopulations, and 3 represents the central subpopulations. High values associated with the central subpopulation are in bold.

Parameter	0.025%	MLE	0.975%
Theta, south	2.12	2.17	2.22
Theta, north	1.31	1.35	1.39
Theta, central	3.96	4.11	4.26
M12 (south-north)	1.63	1.73	1.84
M13 (south-central)	4.10	**4.26**	4.42
M21 (north-south)	3.38	3.52	3.67
M23 (north-central)	2.99	3.13	3.27
M31 (central-south)	2.98	3.12	3.26
M32 (central-north)	1.46	1.56	1.66

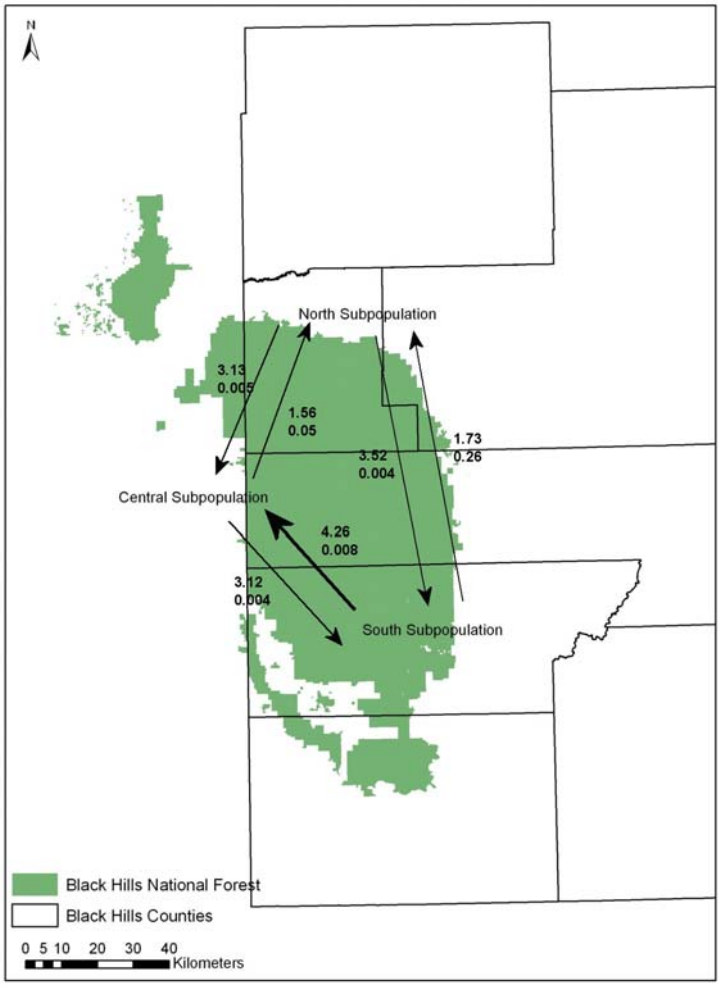

Figure 7.6. Migration rates between subpopulations in the Black Hills. MIGRATE values are on top and BayesAss values are on bottom.

DISCUSSION

The Black Hills, formed during a series of uplifts, are comprised of a mixture of grasses and forests over a uniquely structured landscape (Froiland 1978, Ch. 1). The northern Black Hills is higher in elevation than the southern Black Hills, but the highest elevation is located in central to north-central Black Hills where granite structures are exposed. Vegetation and topography likely influence patterns of genetic exchange, in

which granite outcrops and heterogeneous habitat may cause a barrier to gene flow thereby causing substructure.

Red squirrels reside in the dry, coniferous forests of the south and central Black Hills (M. Hough unpublished data). As a result, it was expected that more gene flow would occur between the south and central subpopulations of red squirrels. However, genetic exchange between subpopulations showed surprising results when considering the topography and vegetation gradients in the Black Hills as well as the natural history of rodents.

According to data analyses with STRUCTURE, there seems some weak substructuring in which three subpopulations may be operating in the Black Hills. However, there seems to be adequate gene flow occurring within the Black Hills, as suggested by FST values, which does not explain the weak substructure. Structure is a widely used MCMC method for determining population substructure. However, MCMC methods suffer from long compute times, occasional difficulties in convergence, and input of information about prior distributions of parameters (Hartl and Clark 2007). From the other perspective, FST is an informative statistic using multiple alleles to examine the overall level of genetic divergence among subpopulations. However, interpretation of FST is difficult; Wright (1978) identified qualitative guidelines for interpretation, but then suggested that differentiation is not negligible if FST is small (Hartl and Clark 2007). It seems the FST provides a better estimate of population substructuring in this case because these estimates are based on allele frequencies rather than genotype frequencies. Frequency based methods tend to perform better than

STRUCTURE when the hypothesized number of subpopulations (*K*) approaches the actual number of subpopulations (Pritchard et al. 2000).

The weak substructuring, if actually present, is somewhat defined by the central subpopulation, which has an accurate assignment of individuals into its subpopulation. The south and north subpopulations are not fully resolved and seem to share assignment of individuals. In addition, PCA shows that the central subpopulation forms a cluster based on microsatellite data. This also suggests that the north and south subpopulations may be one subpopulation. Any structure in the north/south subpopulations needs further investigation into the potential substructuring of these populations, if any.

GENELAND suggests that two subpopulations are found in the Black Hills (STRUCTURE estimates three) and some isolation by distance. There are small discrepancies between GENELAND and STRUCTURE when considering the number of subpopulations each program estimated for red squirrels (Rowe and BeeBee 2007). Therefore, there is likely anywhere from two to three subpopulations operating as a large metapopulation in the Black Hills. Isolation by distance estimates based on individuals suggest that as populations get farther apart, they become genetically less similar. However, these estimates are supported by a very low r^2 value, suggesting that isolation by distance is very weak.

The weak substructuring that occurs within the red squirrel population may result from the patterns of migration, particularly the lack of recent gene flow among subpopulations in the Black Hills. More migrants are exchanged between the south and central regions as evidenced by significant pairwise FST estimates and migration of individuals. However, recent gene flow between the central subpopulation and the north

or south subpopulation is small, as suggested by the estimates from BayesAss. Moreover, the central subpopulation is seemingly isolated from other subpopulations, as suggested by estimates from MIGRATE. This may indicate that there is a recent barrier to gene flow (i.e., fragmentation of forested lands) thereby possibly causing the isolation of the central subpopulation. Furthermore, the north and south also have little recent gene flow, which may lead to eventual isolation of these subpopulations.

Barratt et al. (1999) also observed differentiation among alleles, and suggested that these data are indicative of high levels of inbreeding within subpopulations. Overall inbreeding rates are low in the population, but inbreeding is high in the northern subpopulation. High inbreeding rates in the northern population is likely due to the small numbers of red squirrels in the northern region due to lack of suitable red squirrel habitat. Not only were red squirrels less common in the northern region, but they were also concentrated in areas in which they were found within the north. This may have led to the weak substructure in the Black Hills, and may suggest evidence of more ancient differentiation among regions (Barratt et al. 1999). Rodents are generally small and have fast generation times and large effective population sizes, thus they might be expected to generate large numbers of new alleles by mutation (Bromham et al. 1996, Li et al. 1996), which could lead to genetic divergence if populations or subpopulations are isolated.

However, red squirrels show low levels of heterozygosity, as is the case with other populations (Bidlack and Cook 2002). In some cases, there are deviations from Hardy-Weinberg equilibrium and linkage disequilibrium. Trizio et al. (2005) also showed low heterozygosity and deviations in microsatellite allelic frequencies (from Hardy-Weinberg Equilibrium) within European red squirrel (*Sciurus vulgaris*)

populations. Observed heterozygosity levels in European red squirrel subpopulations range from 0.48 to 0.59 (Trizio et al. 2005), in comparison to the Black Hills red squirrel subpopulations which range from 0.59 to 0.61. Population equilibrium, in terms of genetic factors, in squirrels can be restored in about 15 – 20 years in squirrels (Wauters and Dhondt 1995).

As evidenced by low F-statistics, gene flow seems to be occurring throughout the Black Hills. Squirrel populations in Britain and Europe appear to be strongly differentiated genetically, according to high F_{ST} values (Hale et al. 2004), unlike that found in the Black Hills. High gene flow may result from the high number of migrants from the south and north subpopulations or from opportunities to randomly mate with individuals within the population due to high squirrel numbers. With a low F_{ST} value, low F_{IS} values, and weak subpopulation structure, there may be an indication that subpopulations are panmictic. Interestingly, Trizio et al. (2005) also found that European red squirrel populations are characterized by low F_{ST} values and significant pairwise F_{ST} tests. Thus, the European red squirrel population in the Italian Alps is likely similar to the red squirrel populations in the Black Hills.

The total population (i.e., all subpopulations) of red squirrels in the Black Hills may be panmictic based on low F-statistics and relatively high migration rates. Individuals within populations are cause for more genetic variation than weak population substructuring. However, there appears to be weak substructuring, in which the central subpopulation is somewhat isolated and may serve as transitional habitat to red squirrels. Due to low heterozygosity, it is likely red squirrel populations are experiencing the Wahlund effect, where weak subpopulation structure caused a reduction in

heterozygosity. Eurasian red squirrel populations in the Italian Alps also showed a weak Wahlund effect due to a deficit in heterozygosity and no substructure based on Hardy-Weinberg equilibrium and population differentiation (Trizio et al. 2005). In addition, isolation-by- distance models suggest a significant correlation between genetic and geographical distance over a large scale (Trizio et al. 2005). Trizio et al. (2005) examined population genetic structure in a continuously forested habitat much like the Black Hills. The Black Hills squirrel population shows similar characteristics as Eurasian red squirrel populations.

The density of red squirrels in different regions of the Black Hills likely reflects the patterns of habitat distribution of the Black Hills. Red squirrels are found in pine forests (i.e., ponderosa pine) with adequate food sources (i.e., nuts and cones) in the Black Hills (M. Hough pers. comm.). Subpopulations of red squirrels are likely more evenly distributed in the central and southern Black Hills due to habitat availability in these areas. Surprisingly, migration and gene flow are more common between the northern and southern subpopulations in the Black Hills, which suggests that the central subpopulation may be somewhat isolation from other subpopulations.

Red squirrels are found throughout the Black Hills, but found in higher densities in the southern and central regions. Data, such as F-statistics and migration rates, suggest that there is high gene flow between all three subpopulations (north, central, and south) in the Black Hills. However, migration is greatest between the northern and southern subpopulations. As a result, there appears to be weak subpopulation structuring in the Black Hills. Significant pairwise F_{ST} estimates and low heterozygosity suggest that the Black Hills, though panmictic, may suffer from the Wahlund effect due to subpopulation

structuring (or lack thereof), which is likely a result of ancient genetic differentiation events. Additional sampling in areas not previously sampled should be conducted to examine these squirrel subpopulations further. This will allow for a more comprehensive look into the population genetic structure of red squirrels in the Black Hills.

CHAPTER 8: PHYLOGEOGRAPHY OF THE AMERICAN RED SQUIRREL (*TAMIASCIURIUS HUDSONICUS*) POPULATION IN THE ROCKY MOUNTAINS, BLACK HILLS, AND MIDWEST

INTRODUCTION

At present, the red squirrel (*Tamiasciurus hudsonicus*) is distributed in northern North America and parts of the Rocky Mountains (Wilson and Ruff 1999, Ch. 1). The red squirrel population in the Black Hills is apparently disjunct from other red squirrel populations within their range (as described above) in North America (Jones et al. 1985). Regionally, red squirrels are found in the Black Hills of South Dakota and Wyoming (Jones et al 1985), and northeastern South Dakota (Kiesow et al. 2007).

Red squirrel populations in western South Dakota are designated as a separate subspecies *T. h. dakotensis*, suggesting that this species is unique to the Black Hills region (Hall and Kelson 1959, Turner 1974). This classification was based solely on darker hair color and longer, heavier body size and does not take into account any molecular (DNA-based) data (Turner 1974), thus whether this subspecies is distinct still remains unclear. Thus far, mitochondrial DNA research shows three lineages of New World red squirrels: 1) a western lineage, 2) a southwestern lineage, and 3) a widespread lineage (comprising all other populations of *T. hudsonicus*) (Arbogast et al. 2001). *T. h. dakotensis* is found in the widespread lineage. Arbogast et al. (2001) sampling scheme did not specifically address the Black Hills population of red squirrels, *T. h. dakotensis*, to determine whether this population is a separate genetic entity to South Dakota (and thus the Black Hills).

Subspecific names in *Tamiasciurus* may be incorrectly applied because of difficulties in identifying and/or deciphering differences in morphological characteristics between regions (Hall 1981), so further investigation is needed to ascertain their taxonomic status. Red squirrels are widespread in the Black Hills and may be taxonomically distinct compared to conspecific populations in other areas of North America. If they are distinct based on genetic data, they may warrant further protection. I examined the phylogeographic patterns of Black Hills red squirrels to other nearby populations, using mtDNA sequences and microsatellite data, to determine the genetic relatedness between these populations and to test their taxonomic distinctiveness.

METHODS

Study Sites and Sample Collection

The Black Hills was chosen as a sample site for several reasons. The Black Hills are unique geological formations with many geological and topographical features, are isolated from nearby mountain ranges, and serve as home to many remnant species (Ch. 1). As a result, the Black Hills is an excellent study site for examining within-population genetic structure of an isolated population.

Sample sites, i.e., trap sites, were interspersed throughout the south, north, and central regions of the Black Hills from 2005 – 2007 (Figure 1.5, Ch. 1). Sites were selected based on previous sightings and suitable habitat. The south region was sampled from 9 May to 14 July 2005 and 11 – 18 August 2005, the north region was sampled from 10 May to 14 July 2006 and 15 – 25 August 2006, and the central region was sampled 10 May to 24 June 2007.

Mountain ranges near to the Black Hills, i.e., the northern Rocky Mountains and western Midwest, were sampled to collect red squirrel samples from nearby populations within this squirrel's range (Ch. 1). Western, i.e., Montana, Idaho, Utah, and Wyoming (hereafter called "west"), and eastern, i.e. Minnesota and Wisconsin (hereafter called "east"), states were trapped in areas with previous sightings and suitable habitat in order to obtain ear clippings (Figure 8.1). Western states were sampled from 18 May 2006 to 12 August 2006, and eastern states were sampled from 14 June 2006 to 25 June 2006 and 10 July 2006 to 20 July 2006. In addition, tissue samples were collected in 2005, albeit sporadically, from other biologists in states west and east of the Black Hills.

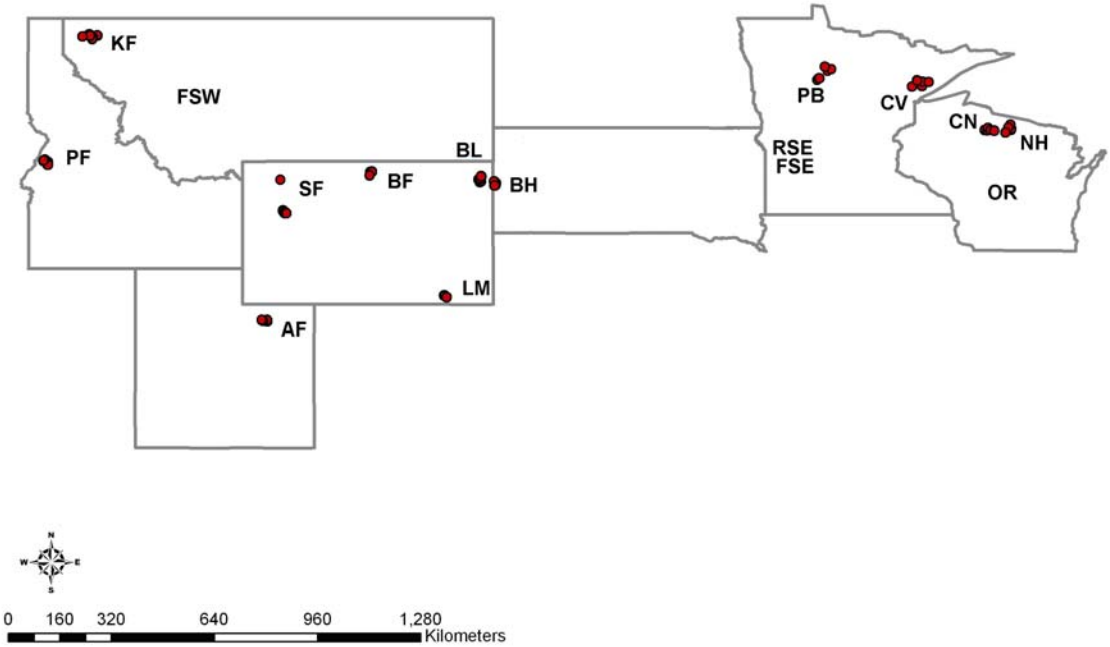

Figure 8.1. Locations of samples sites indicated by the red dots.

To collect samples, 20 Havahart® and/or Tomahawk© baited traps were placed in a line transect, with one trap per tree every 60 – 80 m. Bait included a mixture of peanut butter, bacon grease, and oatmeal. Traps were placed in trees in suitable habitat for up to 14 days and checked each morning during this period. Handling and capturing

techniques were approved by the South Dakota State University Animal Care and Use Board.

Each captured red squirrel was weighed and classified as adult or juvenile. In addition, ear clippings were collected from captured individuals for genetic analysis. A total was 96 red squirrel samples (i.e., ear clippings) collected from the Black Hills (Figure 1.5; Table 8.1), a total was 57 samples collected from the west, and a total was 55 samples collected from the east. A subset of these samples, 118, was used for mtDNA phylogenetic analyses (Table 8.2), and all samples were used for microsatellite phylogenetic analysis.

Table 8.1. Number of red squirrel samples collected from each region of the Black Hills.

Site	Number of Samples
North	18
Central	31
South	47
Total	96

Table 8.2. Identification codes and number of samples sequenced for mtDNA analysis in states west and east of the Black Hills.

	ID	**Area**	**State**	**Samples**
West States	PF	Payette National Forest	ID	4
	KF	Kootetnai National Forest	MT	5
	FSW	Western Montana	MT	3
	SF	Shoshone National Forest	WY	2
	BF	Bighorn Mountains	WY	7
	LM	Laramie Mountains	WY	6
	AF	Wasatch - Cache National Forest	UT	4
			Total	31
East States	RSE/FSE	Western Minnesota	MN	2
	PB	Paul Bunyon State Forest	MN	7
	CV	Cloquet Valley State Forest	MN	6
	CN	Cheuamegon Nicolet National Forest	WI	0
	NH	Northern Highland State Forest	WI	6
	OR	Central Wisconsin	WI	16
			Total	47
Black Hills/Bear Lodge	BH	Black Hills National Forest	SD	34
	BL	Bear Lodge National Forest	WY	6
			Total	40

Other areas in South Dakota, outside of the Black Hills, were trapped for red squirrels. Trapping techniques were similar to those used in the Black Hills. Areas trapped in South Dakota included the extreme northeast (i.e., Secchi Hollow and Hartford Beach SP) from 24 to 29 July 2006 and the extreme northwest (i.e., Custer National Forest) from 27 May to 2 June 2006. No samples were collected from these areas, though red squirrels were detected in the northeastern portion of South Dakota (Kiesow et al. 2007).

DNA Extraction and Amplification

DNA was extracted from ear clippings (or samples) collected throughout the areas specified above. Extraction was conducted using reagents and methods provided in the QIAGEN DNeasy blood and tissue extraction kit. Ear clippings from five to ten individuals from each sample site were amplified with two different mitochondrial DNA (mtDNA) regions (i.e., cytochrome b and mtDNA control region), which are amplifiable in these squirrels. All amplifications were conducted with 15 uL reactions containing 1.0 uL of genomic DNA, 0.5 uL of 10 uM forward primer, 0.5 uL of 10uM reverse primer, and 7.5 uL of 2X PCR Master Mix (Promega). The mtDNA cytochrome b region (forward and reverse primes) consisted of L14724 (5-CGAAGCTTGATATGAAAAACCATCGTTG-3) and H15149 (5-AAACTGCAGCCCCTCAGAATGATATTTGTCCTCA-3), which targeted the cytochrome b region (Arbogast 1999). Amplification occurred under the following conditions: 93ºC for 3 min followed by 3 cycles of 93ºC for 3 min, 41ºC for 15 sec increasing to 72ºC over 3 min, and 72ºC for 2 min then followed by 29 cycles of 93ºC for

45 sec, 56ºC for 1 min 30 sec, and 72ºC for 2 min 30 sec followed by 72ºC for 10 min. The mtDNA control region (forward and reverse primers) was amplified using primers H16359 (5-GGAAGGGGATAGTCATTTGG-3; Barratt et al. 1999) and RScont6 (5-CCTTCAACTCCCAAAGCTGA-3; Hale et al. 2001), which targeted a 457 bp stretch of the mtDNA control region. Amplification occurred under the following conditions: 94ºC for 4 min, then 30 cycles of 94ºC for 30 s, 50ºC for 30 s, 72ºC for 1 min 30 sec, with a final extension of 72ºC for 10 min (Hale et al. 2001).

All squirrel samples (i.e., all samples from the Black Hills, west, and east) were also amplified at 16 microsatellite loci using primers specifically developed for American red squirrels, as described in previously published literature: Thu03, Thu08, Thu14, Thu21, Thu23, Thu25, Thu31, Thu32, Thu33, Thu37, Thu38, Thu41, Thu42, Thu50, Thu55, and Thu59 (Gunn et al. 2005). These loci were amplified in 15 uL reactions containing 1.0 uL of genomic DNA, 0.5 uL of 10 uM forward primer, 0.5 uL of 10uM reverse primer, and 7.5 uL of 2X PCR Master Mix (Promega). The polymerase chain reaction (PCR) protocol was as follows: an initial a denaturing step of 94ºC for 2 min followed by 5 cycles of 94ºC for 1 min, 64ºC (-1ºC per cycle) for 30 s, and 72ºC for 30 s then followed by 30 cycles of 94ºC for 1 min, 59ºC for 30 s, and 72ºC for 30 s with a final elongation step of 72ºC for 2 min (Gunn et al. 2005). All mtDNA regions and microsatellite loci were amplified on a MJ Research PTC-200 thermocycler or a Bio-Rad MJ Mini thermocycler. Confirmation of PCR amplification was conducted by running a sample on a 1.5% agarose gel and staining with SYBR® Green (Invitrogen).

Amplified mtDNA regions were purified with a PEG precipitation, where mtDNA was precipitated with 20% PEG 800/2.5M NaCl, washed with 80% ethanol, and

resuspended in sterile water. Purified mtDNA products were sequenced using the T3 primer in DYEnamic ET Terminator Cycle Sequencing Kit (General Electric) 1/8th volume reactions. Sequences were electrophoresed on an Avant 3100 Genetic Analyzer. Forward and reverse sequences were generated for each locus in each individual. Then, for each locus these contigs were edited and assembled into a consensus sequence using DNAStar© Lasergene and edited with BioEdit© (T.Hall).

Microsatellite samples were multiplexed with five loci per sample and electrophoresed on an ABI PRISM sequencer, where Liz-500 was used as a size-standard (Applied Biosystems). Each forward primer was fluorescently-labeled with VIC (green), PET (red), or 6-FAM (blue) dye. Data collected during each microsatellite run were analyzed with GeneMapper software (Applied Biosystems).

Data Analyses

A list of accessions sampled in this study is provided in Table 8.2. The aligned lengths of the mtDNA regions were 525 bp for cytochrome b and 543 bp for the control region. An outgroup, a sequence from the eastern fox squirrel (*Sciurus niger*; GenBank Accession number U46178), was used for comparison of the cytochrome b region and combined sequence regions in all trees, and an outgroup, a sequence from the European red squirrel (*Sciurus vulgaris*; GenBank Accession number AY178452), was used for comparison of the control region in all trees. Outgroups were selected based on previous studies (Arbogast et al. 2001) and genetic similarities between species that allow for comparisons with red squirrels.

Edited mtDNA sequences were aligned with ClustalX (Thompson et al. 1994), using slow-accurate pairwise alignment parameters with a gap opening of 10.00 and gap extension of 0.10 and multiple alignment parameters with a gap opening penalty of 15.00 and gap extension penalty of 0.20. Unrooted trees were estimated with PAUP* 4.0 and PHYLIP for each region as well as for combined sequence regions. More specifically, aligned mtDNA sequences were analyzed in PAUP* 4.0 (Swofford 2003) by using a neighbor-joining method based on genetic distances and maximum parsimony. Default parameters were used for genetic distances, but maximum parsimony was conducted using a heuristic stepwise search. Each method was assessed by conducting bootstrap analysis with 1,000 replications. Aligned sequences were also analyzed using a maximum likelihood approach in PHYLIP (i.e., SEQBOOT, DNAML, CONSENSE; Felsenstein 1993) using default parameters, and support for relationships was assessed by conducting bootstrap analysis with 1,000 replications. All trees were visualized in TREEVIEW 1.4 (Page 1996).

In addition to trees, estimates of percent sequence divergence and nucleotide diversity (i.e., the degree of polymorphism) were calculated for each region. Estimates of sequence divergence for all possible pairwise estimates of taxa were calculated under the two-parameter model of Kimura (1980) using PHYLIP (i.e., DNADIST; Felsenstein 1993), as done by previous squirrel researchers (Arbogast 1999, Arbogast et al. 2001), and estimates of nucleotide diversity (i.e., the degree of polymorphism) were calculated using DnaSP 4.5 (Rozas et al. 2003).

All samples collected per population were used for microsatellite analysis. Distance matrix values for microsatellite data were obtained using MSA 4.05 (Dieringer

and Schlštterer 2003). Microsatellite distance matrices (i.e., Nei's distances) were incorporated into PHYLIP (i.e., NEIGHBOR; Felsenstein 1993) to infer phylogenetic relationships and create an unrooted neighbor-joining tree with no outgroup.

RESULTS

Based on the phylogenies from the cytochrome b region (Figures 8.2, 8.3, and 8.4), individuals from the Black Hills and Bear Lodge Mountains are related. All branches are supported with ≥50% bootstrap values. Sequence divergences range from 0.00% to 1.58%, and nucleotide diversity is 0.21. Surprisingly, individuals from the Black Hills and Bear Lodge Mountains are more related to individuals from the eastern regions than from the western regions. Within the Black Hills populations, there appears to be a group of individuals forming a cluster that are from the south and central regions. Genetic structure analysis of the Black Hills indicates that the north and south subpopulations are relatively similar to each other (Ch. 7). In addition, the Black Hills and Bear Lodge Mountains are more related to the Laramie mountains population in Wyoming. Western populations (e.g., Utah, Idaho, and Montana) are most related to each other than to populations elsewhere.

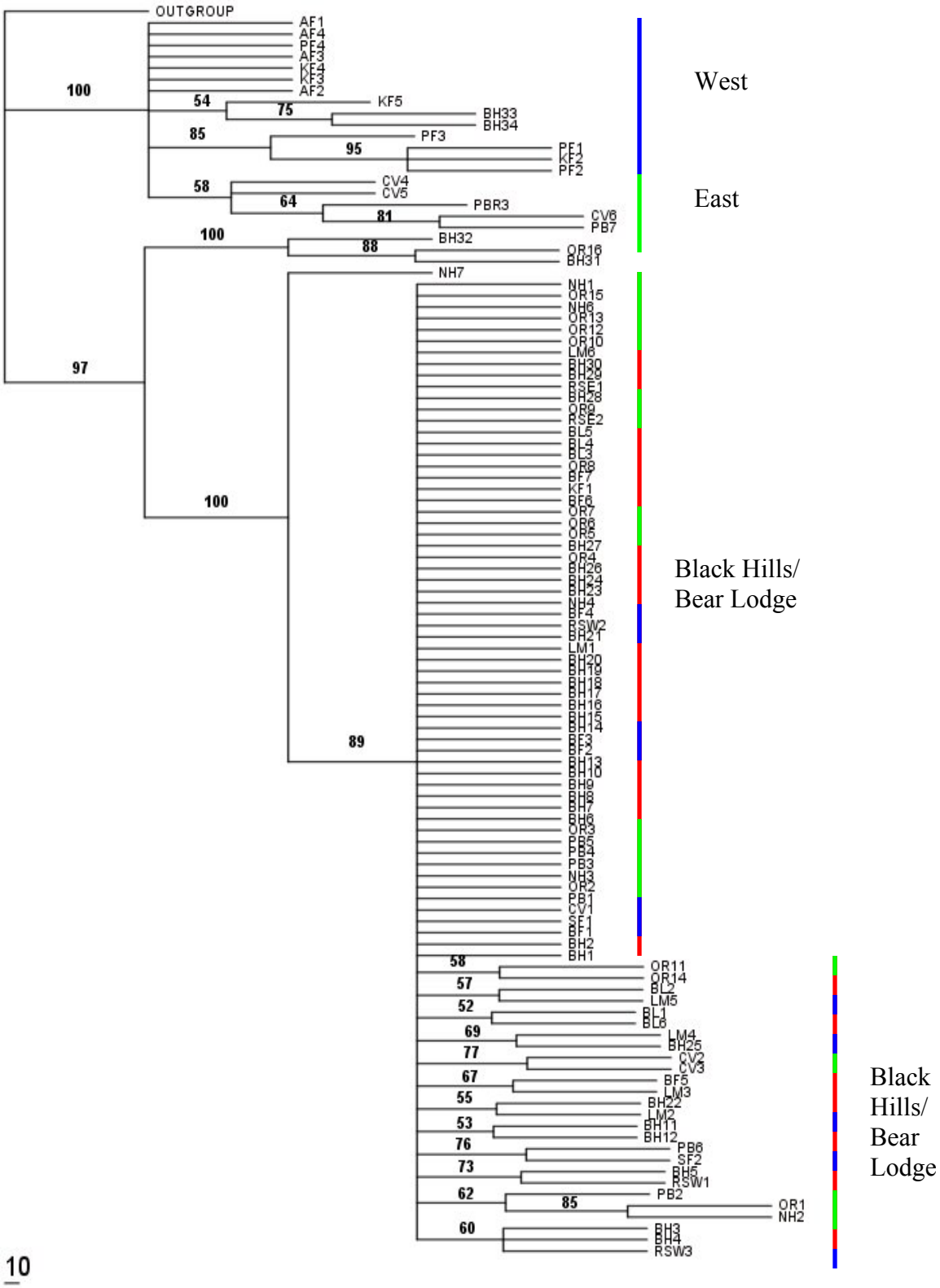

Figure 8.2. Neighbor-joining tree (with bootstrap values) of the cytochrome b region depicting the relationship of red squirrels throughout the sample regions. Samples beginning with BH* and BL* are individuals from the Black Hills (BH*) and Bear Lodge (BL*) mountains.

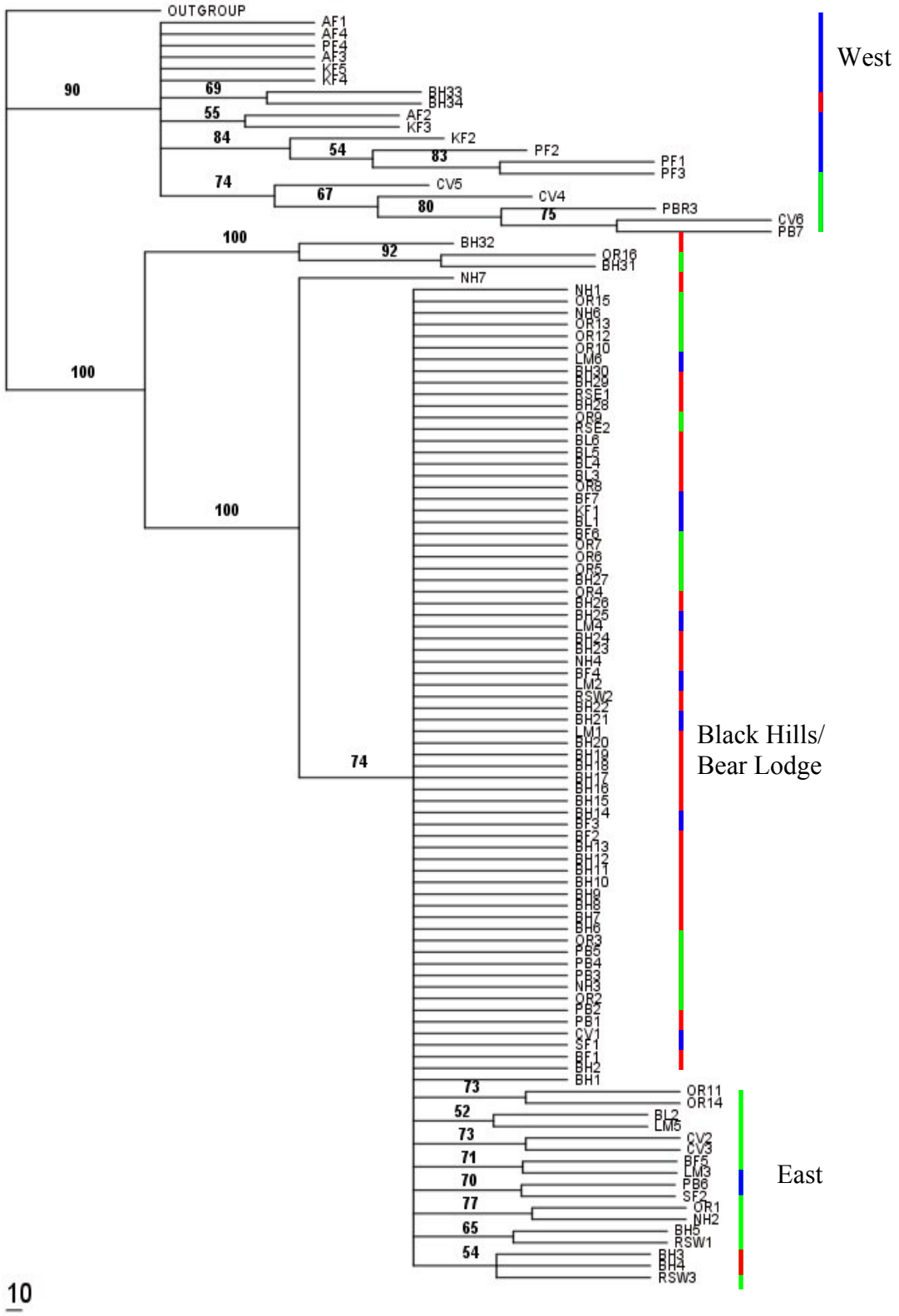

Figure 8.3. Phylogenetic relationship of red squirrels using the cytochrome b region based on parsimony analysis. Samples beginning with BH* and BL* are individuals from the Black Hills (BH*) and Bear Lodge (BL*) mountains.

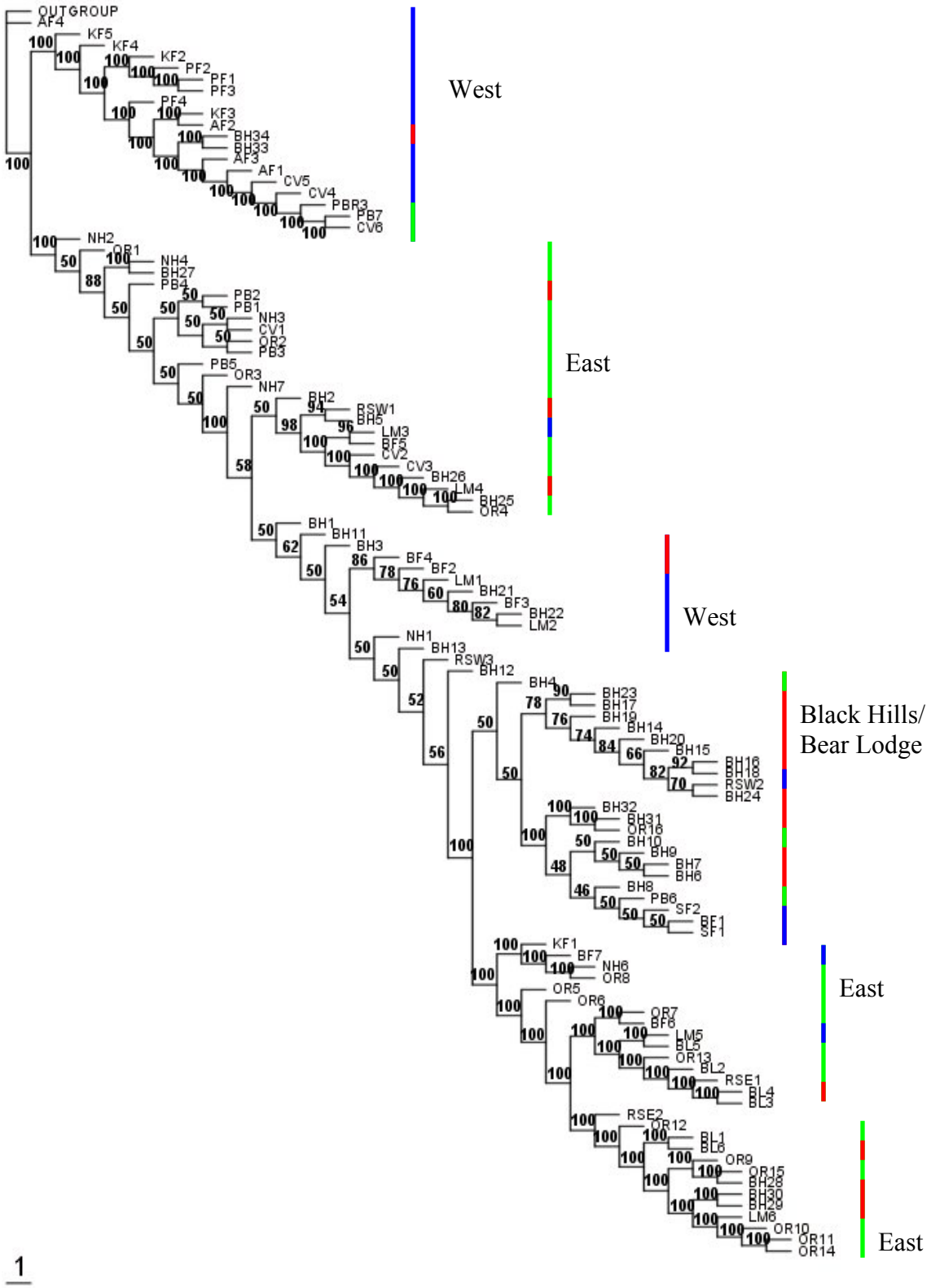

Figure 8.4. Phylogenetic relationship of red squirrels using the cytochrome b region based on maximum likelihood analysis. Samples beginning with BH* and BL* are individuals from the Black Hills (BH*) and Bear Lodge (BL*) mountains.

Phylogenies from the control region (Figures 8.5, 8.6, and 8.7) are slightly different from those of cytochrome b. All branches are supported with ≥50% bootstrap values. Sequence divergences range from 0.00% to 1.04%, and nucleotide diversity is 0.15. In general, all three phylogenies again show the genetic similarities between the Black Hills and Bear Lodge Mountain populations. There are two groups of individuals from the Black Hills and Bear Lodge Mountains, in which one group is more related to western populations and one group is more related to eastern populations. Moreover, each group is related to the Laramie mountains (Wyoming) population. Finally, the Black Hills continues to show a small monophyletic group of individuals from the central and south regions of the Black Hills.

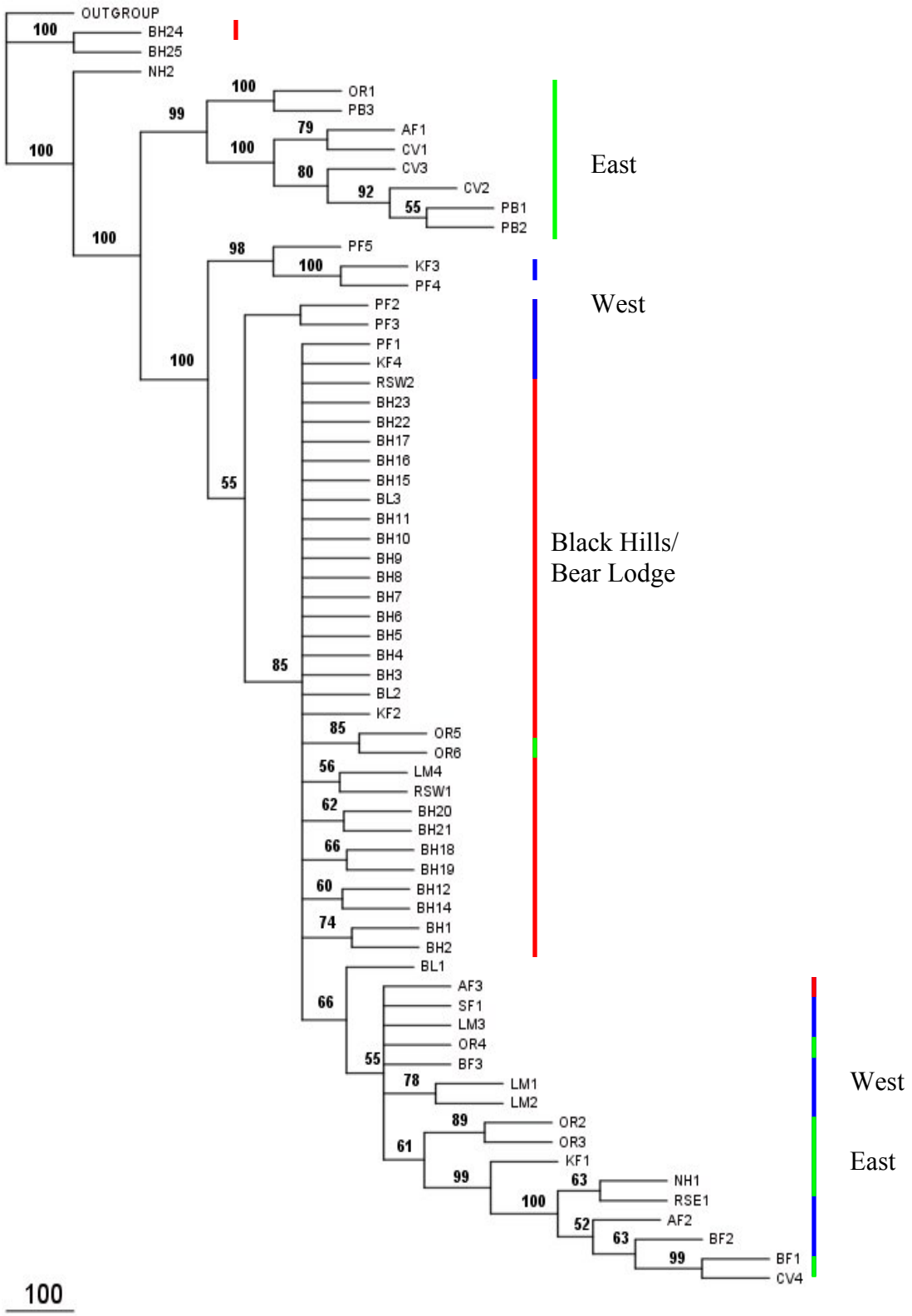

Figure 8.5. Neighbor-joining tree (with bootstrap values) of the mtDNA control region depicting the relationship of red squirrels throughout the sample regions. Samples beginning with BH* and BL* are individuals from the Black Hills (BH*) and Bear Lodge (BL*) mountains.

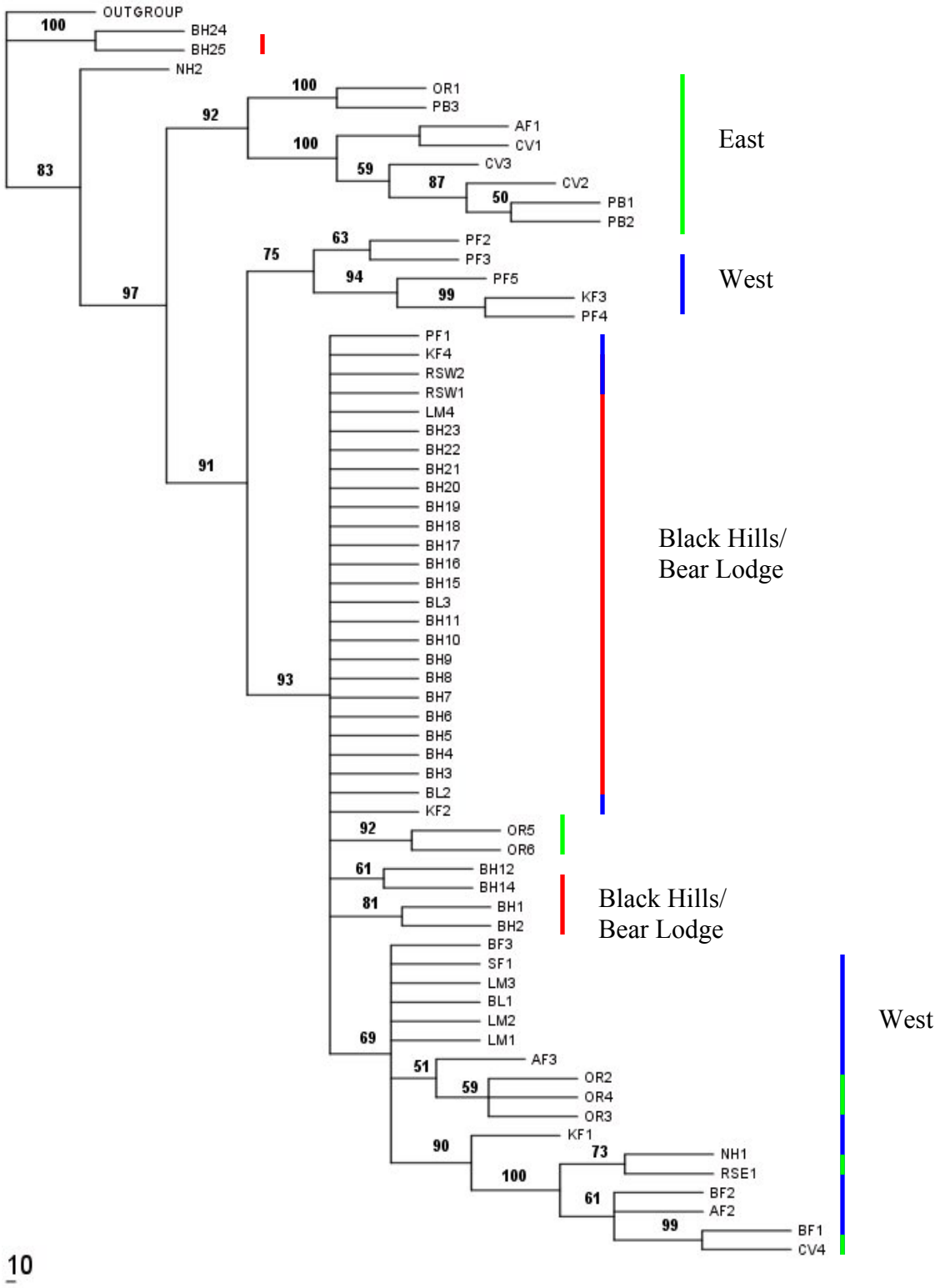

Figure 8.6. Phylogenetic relationship of red squirrels using the mtDNA control region based on parsimony analysis. Samples beginning with BH* and BL* are individuals from the Black Hills (BH*) and Bear Lodge (BL*) mountains.

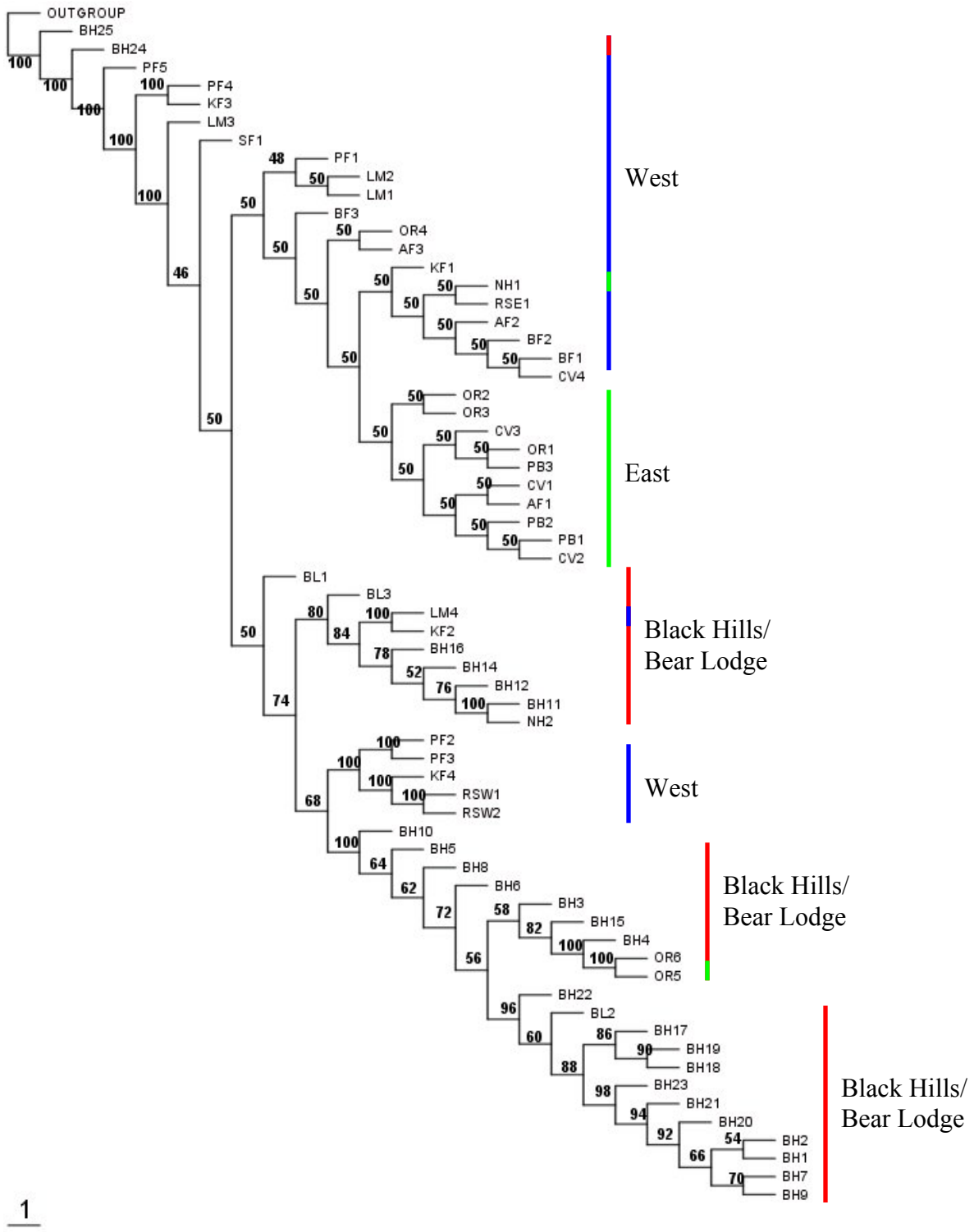

Figure 8.7. Phylogenetic relationship of red squirrels using the mtDNA control region based on maximum likelihood analysis. Samples beginning with BH* and BL* are individuals from the Black Hills (BH*) and Bear Lodge (BL*) mountains.

Phylogenetic analyses with mtDNA regions combined show similar results to that of trees inferred from each mtDNA region (Figures 8.8, 8.9, and 8.10). In addition, the east region appears to be more similar to the Black Hills and Bear Lodge Mountains.

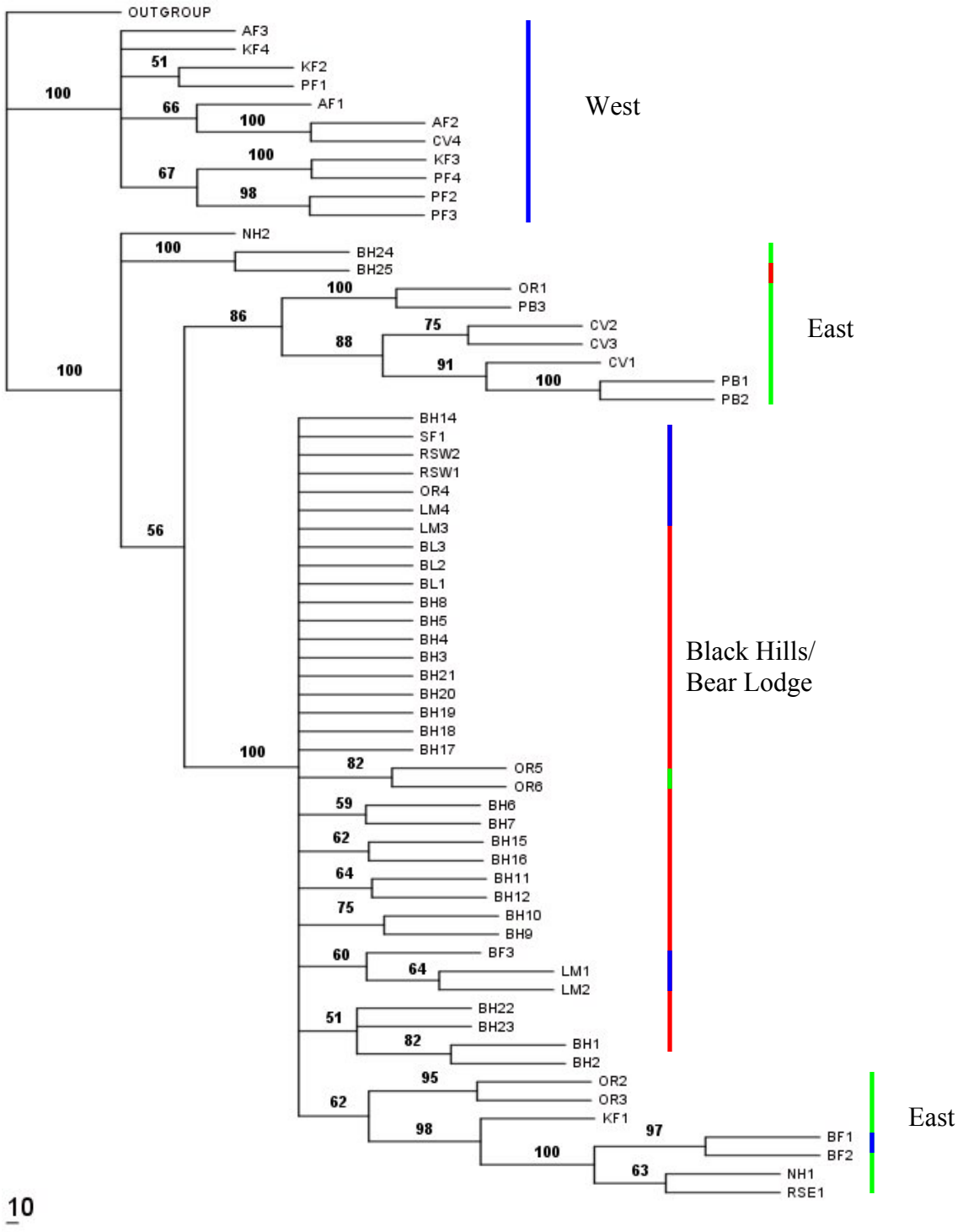

Figure 8.8. Neighbor-joining tree (with bootstrap values) of both regions depicting the relationship of red squirrels throughout the sample regions. Samples beginning with BH* and BL* are individuals from the Black Hills (BH*) and Bear Lodge (BL*) mountains.

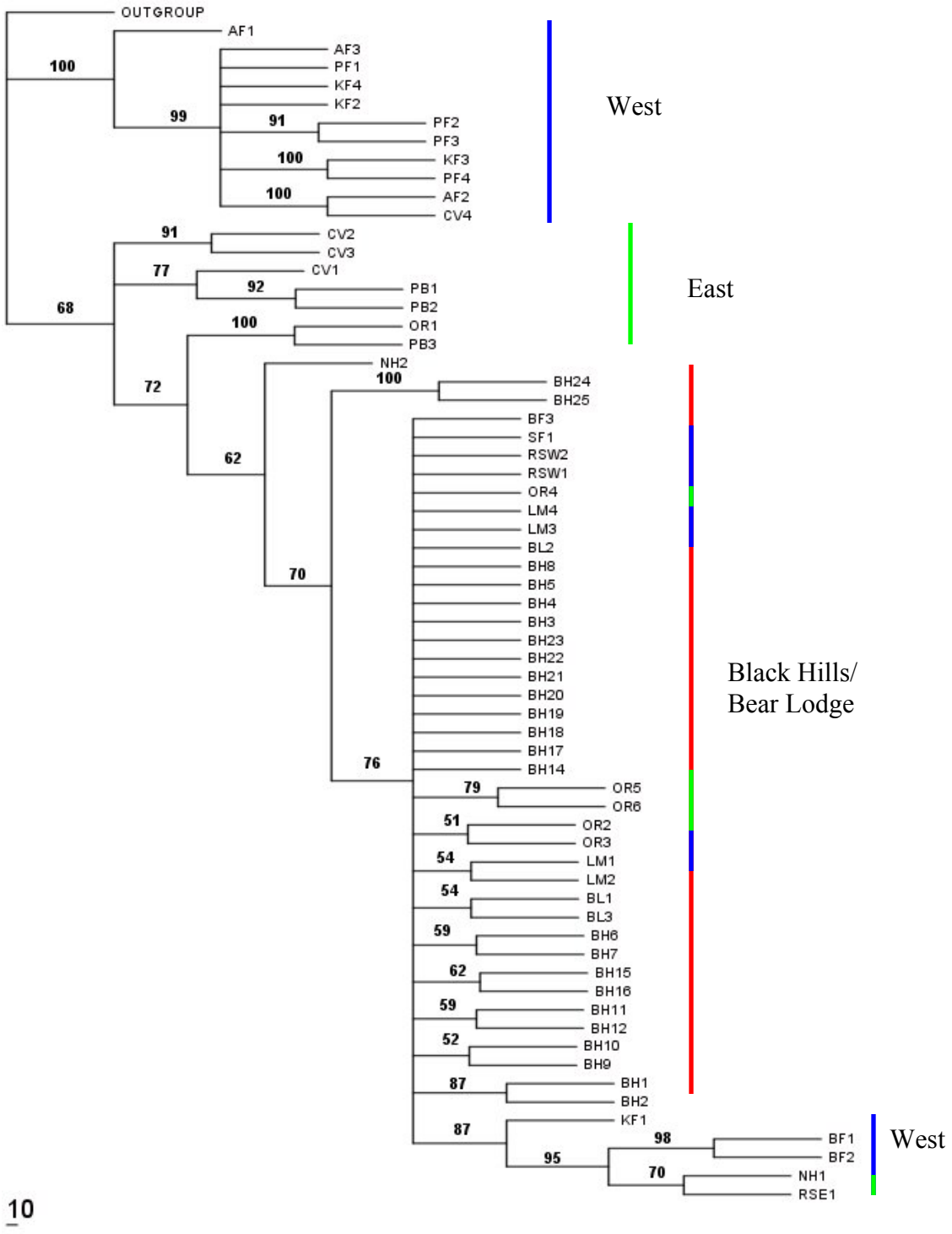

Figure 8.9. Phylogenetic relationship of red squirrels using both regions based on parsimony analysis. Samples beginning with BH* and BL* are individuals from the Black Hills (BH*) and Bear Lodge (BL*) mountains.

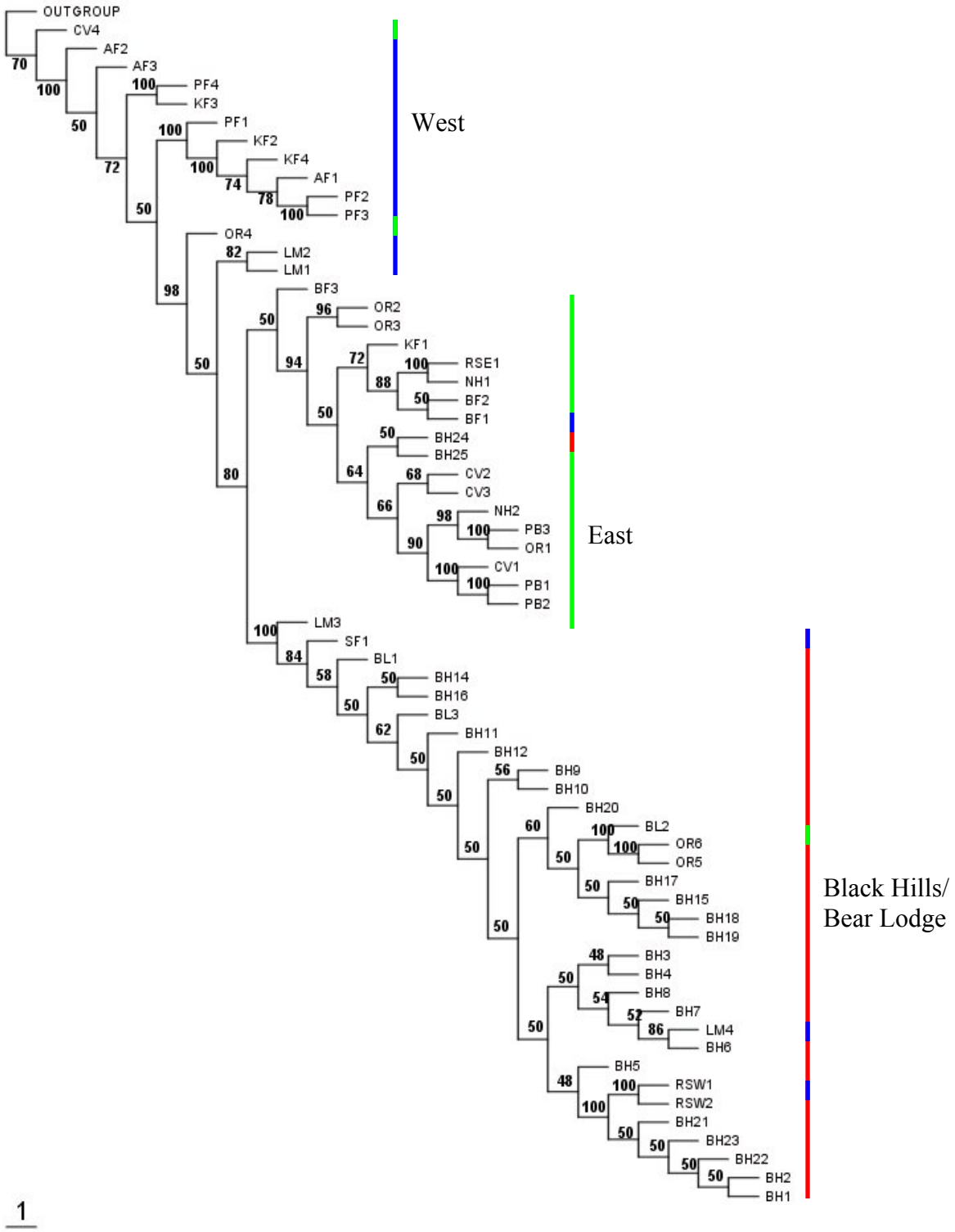

Figure 8.10. Phylogenetic relationship of red squirrels using both regions based on maximum likelihood analysis. Samples beginning with BH* and BL* are individuals from the Black Hills (BH*) and Bear Lodge (BL*) mountains.

Red squirrel populations east of the Black Hills, west of the Black Hills, and near or in the Black Hills are each grouped together based on similarities in microsatellite data (Figure 8.11). Allele presence on locus Thu08 is consistently estimated around 308 bp in the Black Hills population rather than 180 bp, which would suggest an insertion or mutation in this region of the nuclear DNA, suggesting the differentiation of the Black Hills population. Moreover, populations from the Bear Lodge, Black Hills, and Bighorn mountains are grouped together based on genetic similarities. Whereas, populations from northern and central Minnesota and northern and central Wisconsin show genetic similarities and populations from Montana, Wyoming, Utah, and Idaho show genetic similarities and are thus grouped together. However, an eastern population from northern Minnesota is more similar to western populations.

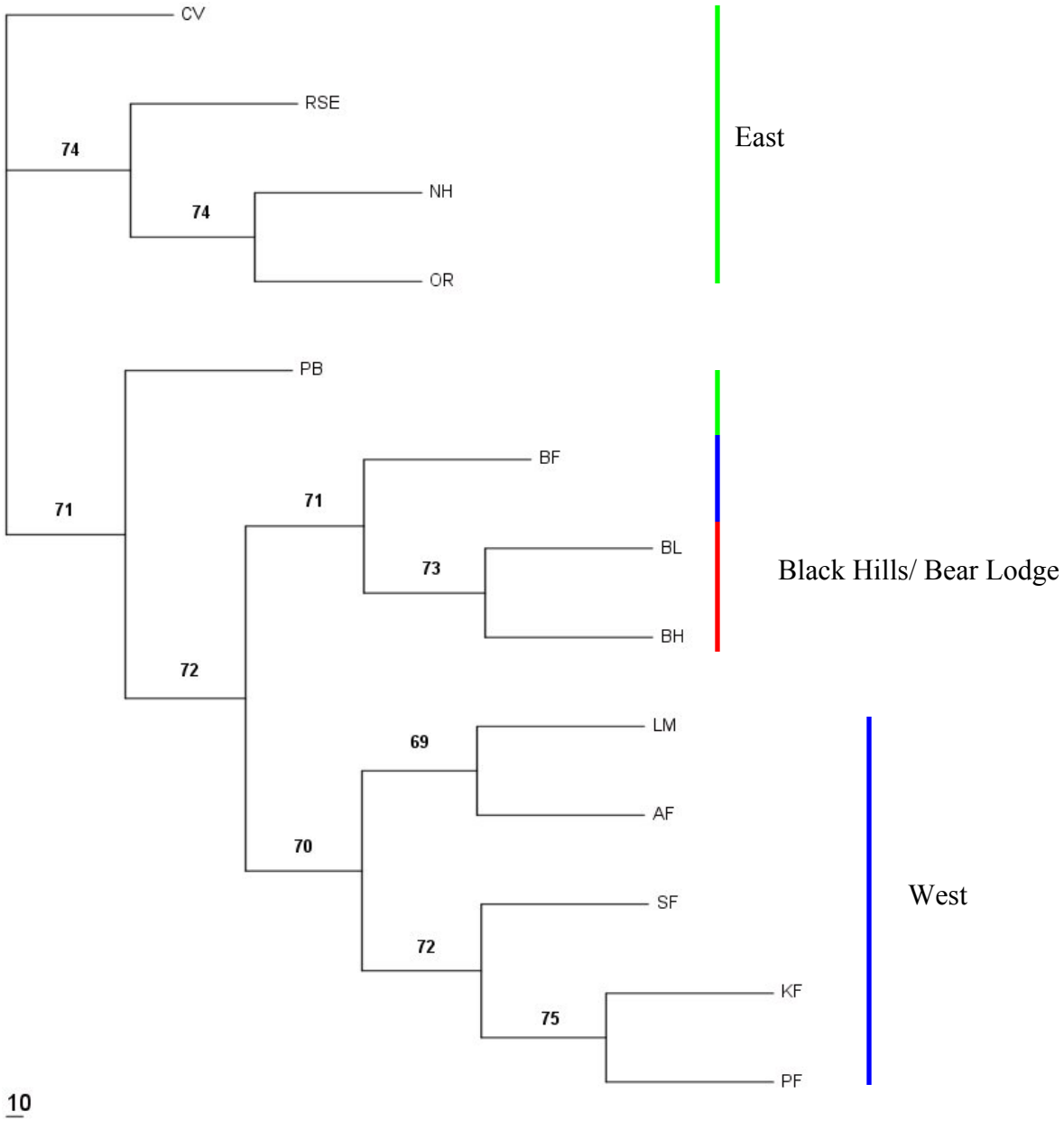

Figure 8.11. Relationship of red squirrel populations from different forest based on microsatellite data (with Nei's distances) and neighbor-joining method of analysis.

DISCUSSION

The Black Hills are unique geological formations with a continental climate and coniferous and prairie vegetation (Peterson 1974), disjunct from other boreal and montane biomes. They are one of the oldest formations in North America, and were formed as a result of a series of uplifts starting in the Pre-Cambrian Period and ending in

the Pleistocene (Froiland 1974). These uplifts occurred as the central dome of the Black Hills was pushed up from beneath thereby exposing geological layers, where the newest layers are on the outside and the oldest layers are in the center (Froiland 1974; Figure 1. 4, Ch. 1).

In the late Pleistocene, several glaciers moved across northern North America. The Black Hills were not glaciated but were surrounded by glaciers to the north, east, and west (Froiland 1978, Ch.1). Glaciated regions caused the climate to change to cooler, moist conditions, which resulted in the southward displacement of northern biota (Turner 1974). Peterson (1974) suggested that montane biota was present in the region during the full glacial period, whereas boreal elements may not have appeared in the Black Hills and other periglacial areas until the late glacial period in the late Pleistocene (~10,000 years ago). Thus, the current boreomontane character of the Black Hills likely became established late in the last glacial period, i.e., approximately 10,000 years ago (Turner 1974).

Eventually, the climate became warmer and drier thereby causing the retreat of the Wisconsin ice sheet in the early Holocene (or late Pleistocene). As this occurred, there was a withdrawal of boreomontane elements from the Northern Great Plains. Frequent fires during this time also prevented boreal forests from persisting in areas outside the Black Hills (Turner 1974). Thus, the boreal forest became displaced further northward where the climate was cool and moist, which likely increased the colonization of temperate species replacing boreal elements.

Boreomontane species likely became stranded in the Black Hills because it served as a refugium (Turner 1974), and only the most tolerant species survived in small,

isolated populations. Moreover, elements from the deciduous forests probably dispersed from the east into the Black Hills via the east-west river systems and associated valleys (Hoffman and Jones 1970) thereby making the Black Hills a mixture of coniferous and deciduous forests and plains species (from the surrounding lowland grasslands).

Boreal elements of the Black Hills are disjunct from contiguous boreal forests; the nearest boreal forest is 700 km to the north (Turner 1974). Thus, the retreat of the glacier caused many relict populations of boreal and montane species, including the red squirrel, to remain in the Black Hills and other montane environments. The nearest mountain range and probable population of these squirrels is 241 km northwest of the Black Hills in the Bighorn Mountains (Froiland 1978). Due to this isolation, the red squirrel population in the Black Hills is likely distinct (or rather unique) from other red squirrel populations.

The red squirrel population in the Black Hills is apparently disjunct from other red squirrel populations within their range (Jones et al. 1985). They are distributed in northern North America and parts of the Rocky Mountains (Hall 1981), and they are found in the Black Hills of South Dakota and Wyoming (Jones et al 1985) and in northeastern South Dakota (Kiesow et al. 2007). Red squirrels in the Black Hills are designated as a separate subspecies *T. h. dakotensis* (Hall and Kelson 1959, Turner 1974), which is based solely on darker hair color and longer, heavier body size and does not take into account any molecular (DNA-based) data (Turner 1974). There are three lineages of red squirrels designated by mitochondrial DNA research, which include a western, southwestern, and widespread lineage (Arbogast et al. 2001).

Previous studies show three mtDNA lineages (i.e., western, southwestern, and widespread [continental]) within *Tamiasciurus* (Arbogast et al. 2001). Sequence divergences of taxa range from 0 – 2.4%, which is rather small. The widespread lineage is comprised of individuals from scattered regions in the central United States (Arbogast et al. 2001). In examining this lineage further, phylogenetic analyses appear to show eastern and western groups, in which the Black Hills and Bear Lodge Mountain populations are similar to each other and most similar to the Laramie and Bighorn Mountains (in Wyoming). These ranges are nearest to the Black Hills and Bear Lodge Mountains, located 241 km to the northwest of the Bear Lodge Mountains. Because of the isolation of the Black Hills and Bear Lodge Mountains, red squirrels show the most genetic similarity within these ranges (as with northern flying squirrels, Ch. 5). Moreover, the Black Hills population of red squirrels show little within-population genetic structure, $F_{ST} = 0.03$, and low observed heterozygosity, 0.50, which indicates this population has adequate gene flow within the Hills, characteristics of an isolated population (Ch. 7). These ranges, however, are also genetically similar to the Laramie and Bighorn Mountains. In addition, sequence divergences of taxa are small (0 – 1.58%), much like that shown in previous studies. This would suggest that red squirrels from South Dakota, though classified as a separate subspecies, may require reclassification to contain other nearby populations (i.e., the Laramie and Bighorn Mountains) west of the Black Hills.

Nucleotide diversity is rather high (0.21 [cytochrome b] and 0.15 [control region]), which indicates that there is a high degree of polymorphism within the population. This suggests that there may be genetic exchange occurring between

populations in the west, east, and Black Hills. According to previous studies, nucleotide diversity is rather low, 0.007 (Wilson et al. 2005). In addition, nested clade analysis conducted on several Rocky Mountain populations revealed two major clades: 1) a southern clade from southern Colorado and 2) a northern clade comprising northern Colorado, Wyoming, eastern Utah, and eastern Idaho (Wilson et al. 2005). These clades likely diverged in allopatry during the Pleistocene, which is probably what happened with populations between the Black Hills and western Rocky Mountains.

Red squirrels from the Black Hills show genetic similarities with populations from Wyoming, and it is likely glaciation events in the late Pleistocene gave rise to the differences between lineages in all cases. Species from the Black Hills probably are "founders" for populations west of this area, but may have dispersed easterly through once connected riparian forest corridors. As glaciers retreated and caused discontinuous habitat, species with restricted dispersal abilities (i.e., red squirrels) residing in the Black Hills likely diverged. This divergence has led to relict species in the Black Hills. However, red squirrels in the Black Hills show similarities to nearby mountain ranges to the west. Thus, it is suggested that the subspecies *T. h. dakotensis* be reclassified/restructured to include only nearby western mountain ranges (i.e., Laramie and Bighorn Mountains). By doing so, conservation plans associated with this unique population can be established to help maintain this insular population.

CHAPTER 9: INTERACTIONS BETWEEN AMERICAN RED SQUIRREL (*TAMIASCIURIUS HUDSONICUS*) AND NORTHERN FLYING SQUIRREL (*GLAUCOMYS SABRINUS*) POPULATIONS IN THE BLACK HILLS BASED ON HABITAT USE AND FOOD HABITS

INTRODUCTION

Interspecific interactions, including competition, avoidance, coexistence, and mutalism, have implications for species survival and community stability (Sushma and Singh 2006). Competition between species can lead to niche segregation and may force a species out of an area (Sushma and Singh 2006), leading to disparities in survival and abundance. Thus, interspecific interactions may be important in regulating relative abundance of species with overlapping niches (Kozakiewicz 1993). Subtle associations in nature can lead to coexistence (Sushma and Singh 2006). Coexistence often occurs when both species successfully gain access to a limited resource (Sushma and Singh 2006), leading to similarities in survival and abundance.

Two arboreal mammals, northern flying squirrels (*Glaucomys sabrinus*) and red squirrels (*Tamiasciurus hudsonicus*), reside in similar habitats throughout the Black Hills. Northern flying squirrels are mainly found in the north and central regions and use habitats consisting of ponderosa pine (*Pinus ponderosa*), quaking aspen (*Populus tremuloides*), and paper birch (*Betula papyrifera*; M. Hough pers. comm.). Red squirrels are limited to the dense ponderosa pine forests of the Black Hills (Jones et al. 1985).

Vegetation in the Black Hills is a mixture of montane coniferous forests and prairie grasslands (Peterson 1974), which is largely comprised of a montane belt of

ponderosa pine. Five concentric regions comprise the Black Hills, which include (from outer to inner regions): Hogback Ridge, Red Valley, Foothills, Limestone Plateau, and Central Crystalline Area. The Limestone Plateau, Central Crystalline Area, and peaks of the Bear Lodge Mountains form the so-called boreal cap of the Black Hills (Turner 1974, Ch. 1). A subalpine belt of white spruce (*Picea glauca*) and plants with northern affinities can be found in more mesic areas of higher elevations, which are found in the northern Black Hills. More specifically, the boreal cap consists predominantly of coniferous forest with fauna of a boreomontane and/or subalpine origin (Turner 1974). The central Black Hills consists of a mixture of northern and southern vegetative affinities. In lower elevations in the southern Black Hills, vegetation consists primarily of ponderosa pine and Great Plains flora. Great Plains flora consists of a mixture of grasses, forbs, and shrubs. These vegetative characteristics are remnant of the ancient boreal forest of the late Pleistocene, and 0.5% of the 1,260 vascular plants found in the Black Hills are likely endemic (McIntosh 1949). Both squirrel species are found throughout the Black Hills and likely interact in areas were they are both found.

Because these two squirrel species reside in similar habitats throughout the Black Hills and likely interact where they exist together, they provide an interesting opportunity to examine interspecific interactions. These squirrels either compete for resources or coexist and share resources where their home ranges and/or territories may overlap. I examined the interactions between these species by examining home ranges, habitat use, and food habits in areas where they both reside in the Black Hills. By doing so, I hope to elucidate the behavioral relationship (i.e., coexistence or competition) between these species.

METHODS

Radio-telemetry

The Black Hills was chosen as a sample site for several reasons. The Black Hills are unique geological formations with many geological and topographical features, are isolated from nearby mountain ranges, and serve as home to many remnant species (Ch. 1). As a result, the Black Hills is an excellent study site for examining potential interactions between species (i.e., northern flying squirrels and red squirrels) that use similar habitats.

Sample sites, i.e., trap sites, were interspersed throughout the south, north, and central regions of the Black Hills from 2005 – 2007 (Figure 1.5, Ch. 1). Sites were selected based on previous sightings and suitable habitat. The south region was sampled from 9 May to 14 July 2005 and 11 – 18 August 2005, the north region was sampled from 10 May to 14 July 2006 and 15 – 25 August 2006, and the central region was sampled 10 May to 24 June 2007.

To collect individuals, 20 Havahart® and/or Tomahawk© baited traps were placed in a line transect, with one trap per tree every 60 – 80 m. Bait included a mixture of peanut butter, bacon grease, and oatmeal. Traps were placed in trees in suitable habitat for up to 14 days and checked each morning during this period. Handling and capturing techniques were approved by the South Dakota State University Animal Care and Use Board.

Up to 20 adult northern flying squirrels (>100 grams) were fitted with ATS© radio-collars by M. Hough in each region of the Black Hills from 2005 to 2007 (i.e., south [2005], north [2006], and central [2007]), for a total of approximately 60 collared

northern flying squirrels. Up to 20 adult red squirrels (>200 grams) were fitted with Holohil© radio-collars in the north (in 2006) and central (in 2007) regions where northern flying squirrels were radio-collared. Fitting these squirrels with radio-collars in the same region and year allowed me to examine interactions between these species. Thus, radio-tracking data from 2006 and 2007 was used for analyses.

Red squirrels were sporadically tracked during the day to determine core areas of activity. We also tracked them at night to determine den site locations. Flying squirrels, on the other hand, were tracked at various times at night to determine core areas of activity, and were infrequently tracked during the day to determine den site locations. A Global Positioning System (GPS) location was recorded in Universal Transverse Mercator (UTM) using a Garmin® eTrex Vista GPS unit (Garmin International Inc., Olathe, KS). A location was marked if the squirrel was detected in the area. In 2006 and 2007, at least 10 points were collected per northern flying squirrel. In 2006, at least 10 points were collected per red squirrel throughout the year, and in 2007, at least five points were collected per red squirrel during the summer. Activity patterns do not appear to change by season (as evidenced in 2006), thus points were only taken during the summer in 2007.

Locations were downloaded using the DNR Garmin GPS application provided by Minnesota Department of Natural Resources (DNR). These points were incorporated into ArcMap 9.1 (Environmental Systems Research Institute Inc., Redlands, CA) for data analyses.

Home Range

Point data specific to individual squirrels were analyzed using the Home Range Tools extension (Rodgers et al. 2007) in ArcMap 9.1. Minimum convex polygon (MCP) home ranges with 100% and 50% core areas were calculated for red squirrels and northern flying squirrels found within the same area, in which at least five locations were recorded. These data were compared between sexes and regions of each species and between each species using a Wilcoxon Rank Sums test and Kruskal-Wallis test, respectively, in JMP-IN® 4.0 (SAS Institute Inc., Cary, North Carolina).

Habitat Use

A Black Hills vegetation layer (http://www.fs.fed.us/r2/blackhills/projects/gis/index.shtml) was used in concert with the 100% MCP home ranges (per squirrel per individual in areas of overlap) to calculate habitat use. The clip tool in ArcMap 9.1 was used to "clip" the Black Hills vegetation layer to match the 100% MCP home range. Several habitat characteristics/classes were used to determine habitat use of each squirrel of both species. These classes included diameter at breast height (dbh) or tree size, percent canopy cover, habitat type or cover type, and structure. Each class has specific categories in the Black Hills, as established by the National Forest Service (USDA Forest Service 2006):

1) dbh or tree size (E is <2.5 cm, S is 2.5 – 12.25 cm, M is 12.5 – 22.25 cm, L is 22.5 – 39.75 cm, and >40 cm),
2) percent canopy cover (A is <40%, B is 40 – 70%, and C is >70%),
3) habitat type or cover type (TPP [ponderosa pine], TAA [aspen/birch], TBO bur oak], TPB [paper birch], and GRA [grasslands]), and

4) structure (1 [open/grass], 2 [shrub/seedling], 3 [sapling], 4 [mature trees], and 5 [over mature trees]).

These four habitat characteristics were compared between sites by species, between sexes by each species, and between species by using multivariate least squares regression in JMP-IN® 4.0 (SAS Institute Inc., Cary, North Carolina). Multivariate least squares regression calculated the differences in habitat use between sites by species, between sexes by species, and/or between species.

Food Habits

Stomach contents were examined from incidental trap kills of northern flying squirrels from the northern Black Hills and red squirrels from the southern Black Hills. In areas where both species exist, hair samples were also collected and submitted to University of Idaho for stable isotope analyses. These data identified major food groups based on carbon and nitrogen ratios, and were compared between each species using a Kruskal-Wallis test in JMP-IN® 4.0 (SAS Institute Inc., Cary, North Carolina).

RESULTS

In 2006, seven adult red squirrels were radio-collared, and in 2007, 14 adult red squirrels were radio-collared. Twenty northern flying squirrels were collared in 2006 and 2007. However, only ten adult northern flying squirrels in 2006 and seven adult northern flying squirrels in 2007 were used to compare habitat use and home range between red squirrels and northern flying squirrels in the Black Hills. Selecting a subset of northern

flying squirrels for analyses was done because these northern flying squirrels were collared in the same areas as red squirrels.

Home range sizes, measured in hectares (ha), differ between regions in red squirrels and between the two squirrel species (Table 9.1). Red squirrel home ranges do not differ between sexes ($Z = -0.66144$, $p = 0.54$) but do differ between regions ($Z = 1.91703$, $p = 0.05$). Red squirrels in the central region had significantly smaller home ranges than red squirrels in the north region. Flying squirrel home ranges do not differ between sexes ($Z = -0.85428$, $p = 0.39$) or between regions ($Z = -0.82952$, $p = 0.4068$). When comparing the overall home ranges between the two species, there is a significant difference in squirrel home ranges ($Z = -2.35202$, $p = 0.02$), where flying squirrels have a larger home range than red squirrels. In addition, in areas where both squirrels were captured, home ranges slightly overlap between species as evidenced in the northern region (Figure 9.1).

Table 9.1. Mean and standard deviations of home range sizes for both squirrels by sexes and regions. Values are reported in hectares (ha), and bolded values are statistically significant ($p < 0.05$).

Sex/Region	Red Squirrel	Flying Squirrel
Males	2.9819 ± 3.3570	5.9533 ± 2.6566
Females	1.7268 ± 2.7432	5.3004 ± 4.5015
Central Total	**1.137483 ± 2.322**	4.804442 ± 1.9416
North Total	**4.19114 ± 3.2333**	6.36578 ± 3.9566
Overall Total	**2.5255 ± 3.0693**	**5.7229 ± 3.2935**

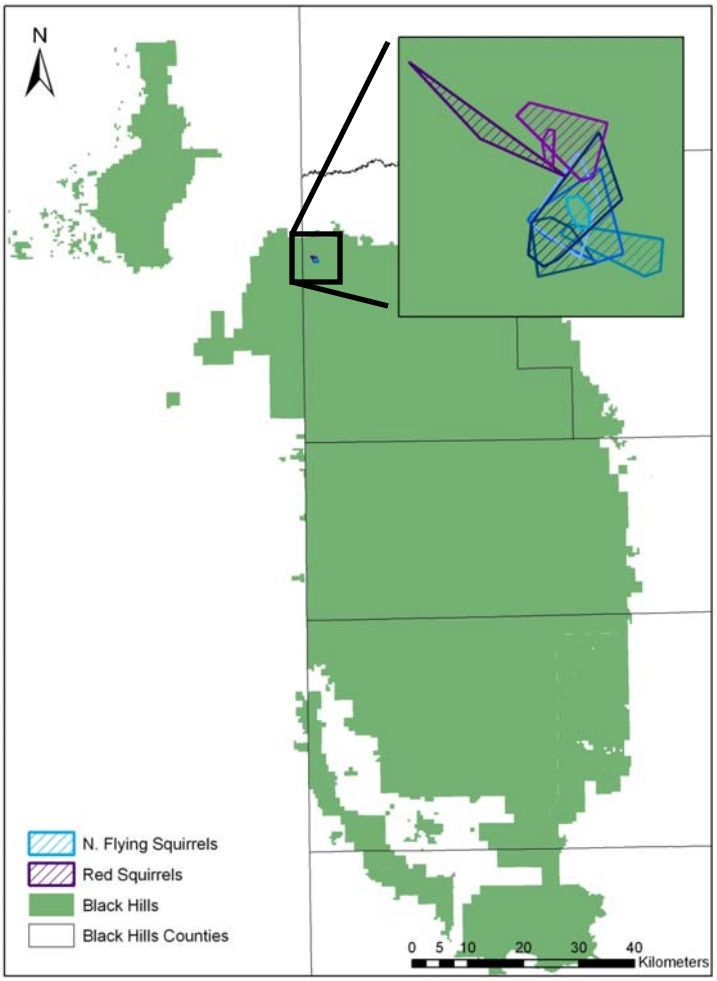

Figure 9.1. Representative red squirrel (purple) and northern flying squirrel (blue) home ranges in the northern Black Hills.

Within their home ranges, red squirrel locations are concentrated around den sites and food caches, and home ranges do not appear to change seasonally. In addition, feeding occurs in the morning rather than the afternoon. Den sites include snags and underground tunnels (in caches), with snags most commonly used between the two. Northern flying squirrel locations are concentrated in areas with large trees, large basal areas, and few snags, and they are located in mesic areas near streams (M. Hough pers. comm.).

When considering four habitat classes, habitat use does not differ between sexes or regions per species but differs between the two squirrel species. For example, red squirrel habitats do not differ between sexes for all four classes (SC [p = 0.73], CT [p = 0.67], TS [p = 0.94], and PCC [p = 0.66]) or between regions for all four classes (SC [p = 0.90], CT [p = 0.56], TS [p = 0.24], and PCC [p = 0.90]). In addition, northern flying squirrels do not differ between sexes for all four classes (SC [p = 0.19], CT [p = 0.39], TS [p = 0.14], and PCC [p = 0.11]) or between sites for all four classes (SC [p = 0.82], CT [p = 0.78], TS [p = 0.30], and PCC [p = 0.07]). However, when comparing these four habitat classes between species, cover type (CT) differs between species (p = 0.03), while the other three classes (SC [p = 0.38], TS [p = 0.67], and PCC [p = 0.50]) do not show a significant difference.

Table 9.2. Habitat use of each squirrel based on four classes (i.e., structure, cover type, tree size, and percent canopy cover), as identified by the USDA Forest Service. Bolded values indicate statistical significance ($p < 0.05$).

Habitat Class	Red Squirrels	Flying Squirrels
Structure Class (SC)	3 to 4	3 to 4
Cover Type (CT)	**TPP**	**TAA with TPP**
Tree Size (TS)	4 to 5	4 to 5
Percent Canopy Cover (PCC)	1 to 2	1 to 2

Stomach contents differ between northern flying squirrels (n = 25) and red squirrels (n = 22). The primary component of the diet of northern flying squirrels is fungi (90%) with eight genera of fungi represented (A. Gabel unpublished data). The diet of red squirrel is comprised of pine cones (94.5%), other vegetative matter (3.5%), and moss (2.0%).

Twenty samples from each squirrel were submitted for stable isotope analysis. Samples were collected from collared red and northern flying squirrels that were used in the home range and habitat use analyses, and additional samples were collected from both

squirrels that were captured in the same area (i.e., the same trap line). Corresponding with the results of the stomach contents, nitrogen ($Z = -2.47532$, $p = 0.01$) and carbon ($Z = 2.63751$, $p = 0.01$) isotopes differ between species during the summer (Table 9.3).

Table 9.3. Normalized stable isotope ratios for atmospheric nitrogen ($\delta^{15}N_{AIR}$) and carbon ($\delta^{13}C_{PDB}$) for each squirrel species. Bolded values are statistically significant ($p < 0.05$).

	Red Squirrels	Flying Squirrels
$\delta^{15}N_{AIR}$ (‰)	**2.08 ± 0.75**	**3.13 ± 1.34**
$\delta^{13}C_{PDB}$ (‰)	**-19.05 ± 1.23**	**-20.22 ± 1.39**

DISCUSSION

Northern flying squirrels have slightly larger home ranges than red squirrels in the Black Hills. Resources within the home range likely predict its size. Rusch and Reeder (1978) suggested that food supply determines habitat use and home range size, where squirrels with small home ranges likely have more food per hectare than squirrels with large home ranges. In areas where these squirrels reside together, red squirrels likely have more available resources such as food (e.g., seeds in pine cones) for their survival, due to the density of ponderosa pine in the Black Hills, than northern flying squirrels. Northern flying squirrels mainly eat fungi, which require moister habitats. Mesic habitats are primarily found in the northern Black Hills. Therefore, availability of food resources may explain the differences in home ranges between these squirrels.

Cover type use (i.e., ponderosa pine, aspen/birch, bur oak, paper birch, and grasslands) differs between these squirrel species. Cover type differs between species because red squirrels prefer mature ponderosa pine forests (TPP), whereas flying squirrels prefer aspen/birch (TAA) forests interspersed with some ponderosa pine (TPP). Each squirrel's habitat use reflects their distribution in the Black Hills, in which northern flying squirrels are denser in the north and central regions and red squirrels are denser in

the south and central regions. According to studies conducted in Alberta, American red squirrels were most abundant in spruce and jack pine stands and least abundant in aspen stands (Rusch and Reeder 1978). Moreover, Abert's red squirrels (*Sciurus aberti*) in Colorado and Arizona are restricted to ponderosa pine stands and thus are ecologically dependent on these stands. This is similar to red squirrels in the Black Hills, in which ponderosa pine stands are their preferred habitat. Thus, habitat may preclude these squirrels from thriving in certain parts of the Black Hills, e.g., northern flying squirrels in the south and red squirrels in the north.

Differences in food preferences reflect the differences in habitat use and home range sizes between these squirrel species. Northern flying squirrels eat fungi, whereas red squirrels eat pine cones, seeds, etc. Food habits likely reflect where these species reside in the Black Hills, which may have lead to the differences in home range size and habitat use in these squirrel species.

Home ranges appear to slightly overlap between these squirrels in the north and central regions of the Black Hills. Territoritality is less evident in disturbed or unnatural habitats, which can lead to a greater extent of overlap in home ranges of these squirrel species (Rusch and Reeder 1978). Thus, home range overlap could be a result of disturbed or unnatural habitats in sampled areas. From a different perspective, if two species have low niche overlap and are separated in space, they can coexist on a regular basis (Sushma and Singh 2006). Coexistence of European red squirrels and grey squirrels (*Sciurus carolinensis*) occurred for over 16 years in Britain, though such occupation does not necessarily mean populations have been in contact, and rather could be avoiding such interactions (Reynolds 1985). These data as well as literature support

suggest that northern flying squirrels and red squirrels may coexist, though further investigation (e.g., experimentation with species removal) is needed before this conclusion is made.

Because northern flying squirrels and red squirrels show no overlap between home ranges and differ in habitat use and food habits, it is likely these squirrels are tolerant of any incidental overlap that may occur between home ranges. In addition, it would seem that in other areas where these two arboreal squirrels are found that one would expect similar habitat use and home range differences. However, additional data collection may be needed to make additional conclusions.

CHAPTER 10: CONCLUSION

In general, the north, central, and south designations were based on sample sites and topography. Flying squirrels seem to be concentrated in the north and central regions, where habitat is suitable. Suitable habitat consists of a mixture of deciduous and coniferous forests. Red squirrels are concentrated in the south and central regions, where habitat is suitable. Suitable habitat consists of coniferous forests.

Overall observed heterozygosity is low in the flying squirrel population as compared to other flying squirrel populations, but it does not seem to suffer from low heterozygosity levels. Rather, there seems to be an abundance of flying squirrels in the Black Hills, particularly in the north and central regions.

In flying squirrels, there are 29 true parent pairs assigned at the 80% confidence level. Of these pairs, the majority of different parent pairs are from the north. In addition, relatedness is high (>0.5), which indicates mating may occur between relatives (i.e., mother-son, brother-sister, father-daughter).

Although tests indicate there may be three subpopulations of flying squirrels in the Black Hills, there does not seem to be robust genetic structure in the Black Hills northern flying squirrel. Migration rates, although not recent, vary between the subpopulations, in which the central subpopulation provides immigrants to both the south and north subpopulations. Migration patterns allow for the introduction of new genes, which likely reduces the effects of low heterozygosity and high relatedness within this population.

Phylogenetic trees from both mtDNA regions (i.e., cytochrome b and a control) of flying squirrels indicate that individuals from Black Hills and Bear Lodge form a separate

group. In some cases, it is quite apparent that individuals from the Black Hills and Bear Lodge are genetically different from forested regions in the Rocky Mountains and Midwest. This genetic difference suggests that the northern flying squirrels in the Black Hills and Bear Lodge Mountains should be reclassified from *Glaucomys sabrinus bangsi* to a new subspecific name, such as *G. s. dakotensis*.

Overall heterozygosity is low for the red squirrel population, as compared to other squirrel populations. However, low heterozygosity does not appear to affect population viability. There seems to be a higher number of individuals in the south and central regions in the Black Hills.

In red squirrels, there are 60 true parent pairs assigned at the 80% confidence level. Of these pair, the majority of the parents are from the central region. Relatedness between true parent pairs is high, ~0.3, which indicates mating may occur between cousins.

There is weak evidence for two to three subpopulations of red squirrels in the Black Hills, with a concentration of somewhat unique genotypes in the central region. Moreover, genotypic variation seems to be concentrated in the north and south regions, which suggests gene flow between these regions. The central region seems to be somewhat isolated from the north and south regions and may form its own subpopulation, as indicated by results from various analyses, including STRUCTURE, PCA, and MIGRATE, which explains the weak genetic structure in red squirrels in the Black Hills.

Phylogenetic trees inferred from mtDNA cytochrome b and control regions of red squirrels indicate that individuals from the Black Hills and Bear Lodge Mountains form a distinct group. Moreover, there appears to be a “cluster” of individuals from the central

and south regions, forming a group separate from the overall cluster of Black Hills and Bear Lodge individuals. Besides the grouping of the individuals from the Black Hills and Bear Lodge Mountains, there are no monophyletic groups formed from the tree analyses. However, it seems that individuals from the Black Hills and Bear Lodge Mountains are related to individuals from the Laramie and Bighorn Mountains in Wyoming. Red squirrels from the Black Hills are currently classified as a separate subspecies, *Tamiasciurus hudsonicus dakotensis*. Given the phylogenetic similarities between the Laramie and Bighorn Mountains and Black Hills and Bear Lodge Mountains red squirrels this taxon should include all four populations.

Home range, habitat use, and food habits indicate that flying squirrels and red squirrels may coexist in areas where they are found. However, additional data are needed to make this conclusion. Home ranges slightly overlap between these two squirrel species, and flying squirrels have larger home ranges than red squirrels. Habitat primarily consists of ponderosa pine for red squirrels, but consists of aspen/birch interspersed with ponderosa pine for flying squirrels. In addition, each squirrel selects different food resources. Red squirrels eat primarily seeds and/or pine cones, whereas flying squirrels eat primarily fungi. All these combine to suggest that these squirrels are using different resources and may not be competing for these resources.

LITERATURE CITED

Arbogast, B. S. 1999. Mitochondrial DNA phylogeography of the New World flying squirrels (GLAUCOMYS): implications for Pleistocene biogeography. Journal of Mammalogy 80: 142-155.

Arbogast, B. S., R. A. Browne, and P. D. Weigl. 2001. Evolutionary genetics and pleisocene biogeography of North American tree squirrels (*Tamiasciurus*). Journal of Mammalogy 82: 302-319.

Arbogast, B. S., R. A. Browne, P. D Weigl, and G. J. Kenagy. 2005. Conservation genetics of endangered flying squirrels (*Glaucomys*) from the Appalachian mountains of eastern North America. Animal Conservation 8: 123-133.

Bailey, R. M., and M. O. Allum. 1962. Fishes of South Dakota. Michigan University Museum of Zoology Miscellaneous Publication No. 119. 131pp.

Barratt, E. M., J. Gurnell, G. Malarky, R. Deaville, and M. W. Bruford. 1999. Genetic structure of fragmented populations of red squirrel (*Sciurus vulgaris*) in the UK. Molecular Ecology 8: S55-S63.

Beerli, P., and J. Felsenstein. 2001. Maximum likelihood estimation of a migration matrix and effective population sizes in n subpopulations by using a coalescent approach. Proceedings of the National Academy of Sciences 98: 4563–4568.

Beerli, P. 2006. Comparison of Bayesian and maximum likelihood inference of population genetic parameters. Bioinformatics 22: 341 – 345.

Bidlack, A. L., and J. A. Cook. 2002. A nuclear perspective on endemism in northern flying squirrels (*Glaucomys sabrinus*) of the Alexander Archipelago, Alaska. Conservation Genetics 3: 247 – 259.

Birkhead, T. R., and A. P. Moller. 1992. Sperm Competition in Birds: Evolutionary Causes and Consequences. Academic Press, London.

Bromham, L., A. Rambaut, P. H. Harvey. 1996. Determinants of rate variation in mammalian DNA sequence evolution. Journal of Molecular Evolution 43: 610–621.

Budowle, B. P. Garofano, A. Hellman, M. Ketchum, S. Kanthaswamy, W. Parson, W. van Haeringen, S. Fain, and T. Broad. 2005. Recommendations for animal DNA forensic and identity testing. Journal of Legal Medicine 119: 295 – 302.

Butler, J. M. 2006. Genetics and genomics of core short tandem repeat loci used in human identity testing. Journal of Forensic Sciences 51: 253 – 265.

Chapman, Joseph A. and George Feldham. 1982. Wild Mammals of North America. Johns Hopkins University Press, Baltimore and London.

Chapuis, M. P., and A. Estoup. 2007. Microsatellite null alleles and estimation of population differentiation. Molecular Biology and Evolution 24: 621-631.

Cockburn, A. 1998. Evolution of helping behavior in cooperatively breeding birds. Annual Review of Ecology and Systematics 29: 141–177.

Dieringer, D., and C. Schlštterer. 2003. Microsatellite analyser (MSA): a platform independent analysis tool for large microsatellite data sets. Molecular Ecology Notes 3: 167-169.

Edelman, A. J., and J. L. Koprowski. 2006. Seasonal changes in home ranges of Abert's squirrels: impact on mating system. Canadian Journal of Zoology 84: 404 – 411.

Eldridge, M. D. B., J. M. King, A. K .Loupis, P. B. S. Spencer, A. C. Taylor, L. C. Pope, and G. P. Hall. 1999. Unprecedented low levels of genetic variation and inbreeding depression in an island population of the black-footed rock-wallaby. Conservation Biology 13: 531 – 541.

Felsenstein, J. 1993. PHYLIP (Phylogeny Inference Packet, Version 3.5c). Department of Genetics, University of Washington.

Froiland, S. G. 1978. Natural history of the Black Hills. Center for Western Studies, Augustana College, Sioux Falls, SD.

Gomez-Raya, L., K. Priest, W. M. Rauw, M. Okomo-Adhiambo, D. Thain, B. Bruce, A Rink, R. Torell, L. Grellman, R. Narayanan, and C. W. Beattie. 2008. The value of DNA paternity identification in beef cattle: Examples from Nevada's free-range ranches. Journal of Animal Science 86: 17 – 24.

Goudet. J. 1995. F-Stat version 1.2: a computer program to calculate F-statistics. Journal of Heredity 86: 485-486.

Guillot, G., A. Estoup, F. Mortier, and J. F. Cosson. 2005. A spatial statistical model for landscape genetics. Genetics 170: 1261-1280.

Gunn, M. R., D. A. Dawson, A. Leviston, K. Hartnup, C. S. Davis, C. Strobeck, J. Slate, and D. W. Coltman. 2005. Isolation of 18 polymorphic microsatellite loci from the North American red squirrel, *Tamiasciurus hudsonicus* (Scuridae, Rodentia), and their cross-utility in other species. Molecular Ecology Notes 5: 650-653.

Hale, M. L., P. W. W. Lurz, M. D. F. Shirley, S. Rushton, R. M. Fuller, and K. Wolff. 2001. Impact of landscape management on the genetic structure of red squirrel populations. Science 293: 2246–2248.

Hale, M. L., P. W. W. Lurz, and K. Wolff. 2004. Patterns of genetic diversity in the red squirrel (*Sciurus vulgaris* L.): Footprints of biogeographic history and artificial introductions. Conservation Genetics 5: 167-179.

Hall, E. R., and K. R. Kelson. 1959. The mammals of North America. Ronald Press Company, Inc., New York, NY.

Hall, E. R. 1981. The mammals of North America. John Wiley and Sons, Inc., New York, NY.

Hamilton, M. B., E. L. Pincus, A. DiFiore, and R. C. Fleischer. 1999. Universal linker and ligation procedures for construction of genomic DNA libraries enriched for microsatellites. Biotechniques 27: 500 – 507.

Hill, W. G., and A. Robertson. 1968. Linkage disequilibrium in finite populations. Theoretical and Applied Genetics 38: 226 – 231.

Hoffman, R. S., and J. K. Jones, Jr. 1970. Influence of late-glacial and post-glacial events on the distribution of recent mammals in the Northern Great Plains. Pages 355-394 *in* Dort, W., Jr., and J. K. Jones, Jr., editors. Pleistocene and recent environments of the Central Great Plains. University of Kansas Press, Lawrence, KS.

Hough, M. J. 2007. Research techniques, habitat use, and ecology of northern flying squirrels, and research techniques and distribution of red squirrels in the Black Hills National Forest and northeastern South Dakota. M. S. Thesis. South Dakota State University, Brookings, SD.

Ishihama, F., S. Ueno, Y. Tsumura, and I. Washitani. 2005. Gene flow and inbreeding depression inferred from finescale genetic structure in an endangered heterostylous perennial,*Primula sieboldii.* Molecular Ecology 14: 983 – 990.

Jones, Jr., J. K., D. M. Armstrong, and J. R. Choate. 1985. Guide to Mammals of the Plains States. University of Nebraska Press, Lincoln, NE.

Kalinowski, S. T., A. P. Wagner, and M. L. Taper. 2006. ML-RELATE: a computer program for maximum likelihood estimation of relatedness and relationship. Molecular Ecology Notes 6: 576–579

Keller, L. K., and D. M. Waller. 2002. Inbreeding effects in wild populations. Trends in Ecology and Evolution 17: 230 – 241.

Kemp, G.A., and L.B. Keith. 1970. Dynamics and regulation of red squirrel (*Tamiasciurus hudsonicus*) populations. Ecology 51:763-779.

Kiesow, A. M., M. J. Hough, and J. A. Kiesow. 2007. Distribution of two arboreal squirrels in isolated forests of South Dakota. South Dakota Academy of Science 86: 35 – 40.

King, J. A. 1951. Subspecific identity of the Black Hills flying squirrels (*Glaucomys sabrinus*). Journal of Mammalogy 32: 469-470.

Koprowski, J. L. 2005. Pine Squirrel (*Tamiasciurus hudsonicus*): a technical Conservation Assessment. USDA Forest Service, Rocky Mountain Region. http://www.fs.fed.us/r2/projects/scp/assessments/pinesquirrel.pdf 20 July 2008.

Kozakiewicz, M. 1993. Habitat isolation and ecological barriers – the effect on small mammal populations and communities. Acta Theriologica 38: 1 – 30.

Krueger, E. M. 2004. Distribution and habitat associations of northern flying squirrels in the northern black hills of South Dakota. *In* South Dakota Wildlife Diversity Small Grants results and reports for 2002. South Dakota Department of Game, Fish and Parks, Pierre, SD.

Lane, J. E., S Coutin, M. R. Gunn, J. Slater, and D. W. Coltman. 2007. Animal Behaviour 74: 671 – 679.

Larson, G.E., and J.R. Johnson. 1999. Plants of the Black Hills and Bear Lodge Mountains: a field guide with color photographs. South Dakota State University, College of Agriculture and Biological Sciences. Brookings, SD.

Latch, E. K., D. G. Scognamillio, J. A. Fije, M J. Chamberlain, and O. E. Rhodes, Jr. 2008. Deciphering ecological barriers to North American river otter (*Lontra canadensis*) gene flow in Louisiana landscape. Journal of Heredity 99: 265 – 274.

Layne, J. N., and M. A. V. Raymond. 1994. Communal nesting of southern flying squirrels in Florida. Journal of Mammalogy 75: 110 – 120.

Li , W. H., D. L. Ellsworth, J. Krushkal, B. H. J. Chang, D. HewettEmmett. 1996. Rates of nucleotide substitution in primates and rodents and the generation time effect hypothesis. Molecular Phylogeny and Evolution 5: 182–187.

Liu, P. X. H. Meng, J. Kong, Y. Y. He, and Q. Y. Wang. 2006. Polymorphic analysis of microsatellite DNA in wild populations of Chinese shrimp (*Fenneropenaeus chinensis*). Aquaculture Research 37: 556-562.

Marshall, T. C., Slate, J., Kruuk, J. E. B. & Pemberton, J. M. 1998 Statistical con. dence for likelihood-based paternity inference in natural populations. Molecular Ecology 7: 639–655.

Massonnet, B., and W. W. Weisser. 2004. Patterns of genetic differentiation between populations of the specialized herbivore *Macrosiphoniella tanacetaria* (Homoptera, Aphididae). Heredity 93: 577-584.

McIntosh, A. C. 1949. A botanical survey of the Black Hills of South Dakota. Black Hills Eng. 28: 1-75.

Menken, S. B. J. 1987. Is the extremely low heterozygosity level in Yponomeuta rorellus caused by bottlenecks? Evolution 4: 630 – 637.

Mengel, R. M. 1970. The North American Central Plains as an isolating agent in bird speciation. Pages 279-340 *in* Dort, Jr., W., and J. K. Jones, Jr., editors. Pleistocene and recent environments of the Central Great Plains. University of Kansas Press, Lawrence, KS.

Merrick, M. J., S. R. Bertelsen, and J. L. Koprowski. 2007. Charactersitics of Mount Graham red squirrel nest sites in mixed conifer forest. Journal of Wildlife Management 71: 1958 – 1963.

Miller-Butterworth, E. M., D. S. Jacobs, and E. H. Harley. 2003. Strong population substructure is correlated with morphology and ecology in a migratory bat. Nature 424: 187 – 91.

Morrissey, M. B., and A. J. Wilson. 2005. The potential costs for accounting for genotyping errors in molecular parentage analysis. Molecular Ecology 14: 4111-4121.

Morrison, D. F. 1990. Multivariate Statistical Methods. McGraw-Hill, New York.

Oosterhout, C., W. F. Hutchinson, D. P. M. Wills, and P. Shipley. 2004. MicroChecker: software for identifying and correcting genotyping errors in microsatellite data. Molecular Ecology Notes 4: 535-538.

Oshida, T., A. Abramov, H. Yanagawa, and R. Masudas. 2005. Phylogeography of the Russian flying squirrels (*Pteromys volans*): implications of refugia theory in arboreal small mammal of Eurasia. Molecular Ecology 14: 1191 – 1196.

Page, R. D. M. 1996. TREEVIEW: An application to display phylogenetic trees on personal computers. Computer Applications in the Biosciences 12: 357-358.

Pearson, D. E. 2000. Evidence of autumn breeding in red squirrels, *Tamiasciurus hudsonicu*s, in western Montana. Canadian Field Naturalist 114: 703 – 704.

Peterson, C. R. 1974. A preliminary report on the amphibians and reptiles of the Black Hills of South Dakota and Wyoming. M. S. Thesis. University of Illinois, Urbana-Champaign, IL.

Platz, J. E., and T. A. Grudzien. 2003. Limited genetic heterozygosity and status of two populations of the Ramsay Canyon leopard frog, *Rana subaquavocalis*. Journal of Herpetology 37: 758 – 761.

Pritchard, J. K., M. Stephens, and P. Donnelly. 2000. Inference of population structure using multilocus data. Genetics 155: 945-959.

Raymond M., and F. Rousset. 1995. GENEPOP (version 1.2): population genetics software for exact tests and ecumenicism. Journal of Heredity 86:248-249.

Reed, D. H., and R. Frankham. 2003. Correlation between fitness and genetic diversity. Conservation Biology 17: 230 – 237.

Reif, J. C., S. Hamrit, M. Heckenberger, W. Schipprack, H. P. Maurer, M .Bohn, and A. E. Melchinger. 2005. Genetic structure and diversity of European flint maize populations determined with SSR analyses of individuals and bulks. Theoretical and Applied Genetics 111: 906-913.

Reynolds, J. C. 1985. Details of the geographic replacement of the red squirrel (*Sciurus vulgaris*) by the grey squirrel (*Sciurus carolinensis*) in eastern England. Journal of Animal Ecology 54: 149 – 162.

Richardson, D. S., F. L. Jury, K. Blaakmeer, J. Komdeur, and T. Burke. 2001. Parentage assignment and extra-group paternity in a cooperative breeder: the Seychelles warbler (*Acrocephalus sechellensis*). Molecular Ecology 10: 2263 – 2273.

Ritchie, J. C., and G. M. MacDonald. 1986. The patterns of post-glacial spread of white spruce. Journal of Biogeography 13: 527-540.

Rodgers, A.R., A.P. Carr, H.L. Beyer, L. Smith, and J.G. Kie. 2007. HRT: Home Range Tools for ArcGIS. Version 1.1. Ontario Ministry of Natural Resources, Centre for Northern Forest Ecosystem Research, Thunder Bay, Ontario, Canada.

Rousett, F. 1997. Genetic differentiation and estimation of gene flow from F-statistics under isolation by distance. Genetics 145: 1219 – 1228.

Rowe, G., and T. J. C. BeeBee. 2007. Defining population boundaries: use of three Bayesian approaches with microsatellite data from British natterjack toads (*Bufo calamita*). Molecular Ecology 16: 785-796.

Rozas, J., J. C. Sánchez-DelBarrio, X. Messeguer, and R. Rozas. 2003**.** DnaSP, DNA polymorphism analyses by the coalescent and other methods. Bioinformatics **19:** 2496-2497.

Rusch, D. A., and W. G. Reeder. 1978. Population ecology of Alberta red squirrels. Ecology 59: 400 – 420.

Sabatti, C., and N. Risch. 2002. Homozygosity and linkage disequilibrium. Genetics 160: 1707- 1719.

Schneider, S., D. Roessli, and L. Excoffier. 2000. Arlequin: A software for population genetics data analysis. Ver 2.000. Genetics and Biometry Lab, Dept. of Anthropology, University of Geneva.

Smith, H. M. 1964. The taxonomic status of the Black Hills populations of smooth green snakes. Herpetologica 19:256-261.

South Dakota Department of Game, Fish and Parks. 2006 Dec 14. Rare, threatened or endangered animals tracked by the South Dakota Natural Heritage Program. http://www.sdgfp.info/wildlife/diversity/RareAnimal.htm 20 July 2008.

Steele, M.A. 1998. *Tamiasciurus hudsonicus*. Mammalian Species 586:1-9.

Sushma, H. S., and M. Singh. 2006. Resource partitioning and interspecific interactions among sympatric rain forest arboreal mammals of the Western Ghats, India. Behavioral Ecology 16: 479 – 490.

Swofford, D. L. 2003. PAUP*. Phylogenetic Analysis Using Parsimony. Version 4. Sinauer Associates, Sunderland, MA.

Thompson,J.D., Gibson,T.J., Plewniak,F., Jeanmougin,F. and Higgins,D.G. 1997. The ClustalX windows interface: flexible strategies for multiple sequence alignment aided by quality analysis tools. Nucleic Acids Research, 24: 4876-4882.

Trizio, I., B. Crestanello, P. Galbusera, L. A. Wauters, G. Tosi, and E. Matthysen. 2005. Geographical distance and physical barriers shape the genetic structure of Eurasian red squirrels (*Sciurus vulgaris*) in the Italian Alps. Molecular Ecology 14: 469-481.

Turner, R. W. 1974. Mammals of the Black Hills of South Dakota and Wyoming. University of Kansas Miscellaneous Publication Museum of Natural History No. 60.

USDA Forest Service. 2005. Black Hills National Forest land and resource management plan: phase II amendment. USDA Forest Service, Black Hills National Forest, Custer, SD.

USDA Forest Service. 2006. Metadata: bkf_veg05. United States National Forest Service.

Vernes, K. 2001. Gliding performance of the northern flying squirrel (*Glaucomys sabrinus*) in mature mixed forest of eastern Canada. Journal of Mammalogy 82: 1026-1033.

Vernes, K. 2004. Breeding biology and seasonal capture success of northern flying squirrels (*Glaucomys sabrinus)* and red squirrels (*Tamiasciurus hudsonicus*) in southern New Brunswick. Northeastern Naturalist 11: 123 – 136.

Wauters, L .A., and A. A. Dhondt. 1995. Components of lifetime reproductive success of female Eurasian red squirrels. Oikos 72: 402–410.

Wauters, L. A., Y. Hutchinson, D. T. Parkin, and A. A. Dhondt. 1994. The effects of habitat fragmentation on demography and loss of genetic variation in the red squirrel. Proceedings of the Royal Society, London B 255: 107–111.

Wells, P. V., and J. D. Stewart. 1987. Cordilleran-boreal taiga and fauna on the Central Great Plains of North America, 14,000-18,000 years ago. American Midland Naturalist 118: 94-106.

Wells-Gosling, N., and L. H. Heaney. 1984. *Glaucomys sabrinus*. Mammalian Species 229: 1-8.

Wilson, G. M., R. A. Den Bussche, K. McBee, L. A. Johnson, and C. A. Jones. 2005. Intraspecific phylogeography of red squirrels (Tamiasciurus hudsonicus) in the central Rocky Mountain region of North America. Genetica 125: 141 – 154.

Wilson, G. A., and B. Rannala. 2003. Bayesian inference of recent migration rates using multilocus genotypes. Genetics 163: 1177-1191.

Wilson, D. E., and S. Ruff. 1999. The Smithsonian Book of North American Mammals. Smithsonian Institute. Press, Washington, D. C.

Winterrowd, M. F., W. F. Gergits, K. S. Laves, and P. D. Weigl. 2005. Relatedness within nest groups of the southern flying squirrel using microsatellite and discriminant function analyses. Journal of Mammalogy 86: 841-846.

Yeh, F. C., and T. J. B. Boyle. 1997. Population genetic analyses of co-dominant and dominant markers and quantitative traits. Belgian Journal of Botany 129: 157.

Zittlau, K. A., C. S. Davis, and C. Strobeck. 2000. Characterization of microsatellite loci in northern flying squirrels (*Glaucomys sabrinus*). Molecular Ecology 9: 826 – 827.

Appendix A. Individual genotypes for five previously published loci for northern flying squirrels from the Black Hills.

Species ID	**Five Loci**									
	FLS1		FLS6		GS13		GS2		GS4	
138BH	178	178	168	172	132	132	230	258	166	172
139BH	178	178	160	168	82	132	230	258	166	166
140BH	178	178	156	164	80	132	230	258	166	166
141BH	178	178	160	168	100	132	230	258	166	166
142BH	178	178	152	168	132	132	230	258	166	166
143BH	178	178	160	172	132	132	230	258	166	166
144BH	168	178	164	168	132	132	230	258	166	166
145BH	178	178	160	164	132	132	230	258	166	166
146BH	178	178	156	164	132	132	230	258	166	166
147BH	178	178	156	168	132	132	230	258	166	166
148BH	178	178	160	168	132	132	230	258	166	172
149BH	178	178	164	168	132	132	230	258	166	166
150BH	178	178	164	164	132	132	230	258	172	166
151BH	178	178	164	168	80	132	230	258	166	166
152BH	178	178	168	172	132	132	230	258	166	166
153BH	178	178	160	168	132	132	230	258	166	166
154BH	178	178	160	188	132	132	230	258	166	166
155BH	178	178	152	168	132	132	230	258	166	166
156BH	178	178	164	172	132	132	230	258	166	166
157BH	178	178	160	172	132	132	230	258	166	166
158BH	178	178	164	176	132	132	230	230	166	166
159BH	178	178	156	168	132	132	230	258	166	166
38BH	168	168	168	168	132	132	230	258	132	166
39BH	178	178	168	168	132	132	230	230	166	172
40BH	178	178	152	160	132	132	230	258	166	172
41BH	178	178	164	168	132	132	230	258	166	166
42BH	178	178	160	164	132	132	230	258	132	162
43BH	178	178	168	172	132	132	230	230	166	166
44BH	178	178	168	172	132	132	258	258	132	166
45BH	178	178	152	156	132	132	230	258	166	166
46BH	178	178	160	168	132	132	230	258	166	166
47BH	178	178	172	176	132	132	230	230	132	132
48BH	178	178	164	172	132	132	230	258	132	166
49BH	178	178	164	164	132	132	230	258	132	166
50BH	178	178	168	176	132	132	230	258	132	166
51BH	178	178	156	168	132	132	230	258	166	166
52BH	178	178	156	172	132	132	230	230	132	166
53BH	178	178	168	172	132	132	230	258	166	166
54BH	178	178	160	172	132	132			166	166
55BH										
56BH	178	178	152	156	132	132	230	258	166	172
57BH	178	178	172	172	132	132	230	230	166	172
58BH	168	168	156	168						
59BH	178	178	164	168	132	132			166	178
60BH	178	178	156	168	132	132			166	166
61BH	178	178	168	172	132	132	230	258	166	166

62BH	178	178	168	168	132	132	230	258	132	166
63BH	178	178	156	164	132	132				
64BH	178	178	164	172	132	132	230	230	166	166
65BH	178	178	164	168	132	132	230	230	166	172
66BH	178	178	156	168	132	132				
67BH	178	178	152	152	132	132	230	230	172	166
68BH	178	178	164	168	132	132	230	230	132	166
69BH	178	178	164	172	132	132	230	230		
70BH	178	178	152	168	132	132			166	166
71BH	178	178	160	160	132	132	230	258	132	166
72BH	178	178	160	168	132	132	230	230	166	166
73BH	178	178	152	172	132	132	230	230	132	176
74BH	178	178			132	132	230	230	166	176
75BH	178	178	164	164	132	132				
76BH	178	178	160	164	132	132	230	230	132	132
77BH	160	178	152	160	132	132				
78BH	178	178	168	172	132	132				
79BH	178	178	168	168	132	132	230	258	132	132
80BH	178	178	164	168	132	132	230	230	132	166
81BH	178	178	164	168	132	132	230	230	132	166
83BH	178	178	164	172	132	132	230	258	132	166
87BH			148	152						
88BH	178	178	164	168	132	132	230	230	132	132
89BH	178	178	168	168	132	132	230	258	132	132
91BH	178	178	164	168	132	132	230	258	166	3
92BH	178	178	164	164	132	132	230	230	132	132
93BH	178	178	164	168	132	132	230	230	132	166
94BH	178	178	160	168	132	132	230	258	132	166
95BH	178	178	168	176	132	132	230	258	166	172
96BH	178	178	160	160	132	132	230	230	132	132
97BH	178	178	160	164	132	132	230	230	132	160
98BH	178	178	160	176	132	132	230	258	132	132
99BH	178	178	160	168	132	132	230	258	132	132
100BH	178	178	160	164	132	132	230	258	132	132
101BH	178	178	168	172	132	132	230	230	132	132
102BH	178	178	168	176	132	132	230	230	132	132
103BH	178	178	160	168	132	132	230	230	132	132
104BH	168	168	168	172						
105BH	168	178	152	172	132	132	230	230	132	132
106BH	178	178	156	164	132	132			132	132
107BH	178	178	168	172	132	132	230	230	132	172
108BH	178	178	160	182	132	132	230	230	132	132
109BH	178	178	164	172			258	258		
110BH										
111BH	164	178	164	164	132	132	230	258	166	172
112BH	178	178	152	172			258	258	166	172
113BH	178	178	164	176	132	132	230	258	172	172
114BH	178	178	152	152	132	132	230	258	166	172
115BH	178	178	168	168	132	132	230	258	166	172
116BH	178	178	168	176	132	132	230	258	166	166

117BH	178	178	156	172	132	132	230	258	166	166
118BH	178	178	152	156	132	132	258	258	166	172
119BH	178	178	168	168	132	132	258	258	132	166
120BH	178	178	160	160	132	132	258	258	132	166
122BH	178	178	172	172	132	132	230	258	166	166
123BH	178	178	142	152	132	132			166	132
124BH	178	178	160	164	132	132	230	258	166	172
125BH	178	178	164	176	132	132	230	258	166	144
126BH	178	178	160	168	80	132	258	258	166	172
127BH	178	178	164	168	132	132	258	258	166	166
128BH	178	178	160	172	132	132	230	258	166	172
129BH	178	178	160	164	132	132	258	258	166	166
130BH	178	178	164	172	132	132	230	258	166	172
131BH	178	178	164	172	132	132	230	258	166	172
132BH	178	178	160	172	132	132	258	258	166	172
133BH	178	178	152	164	132	132	230	258	166	166
134BH	178	178	156	186	132	132	230	258	166	176
135BH	178	178	160	164	132	132	230	258	166	172
136BH	178	178	160	164	132	132	230	258	166	166
1BH	178	178	168	176	132	132	230	258	166	172
2BH			164	164					166	172
3BH					132	132				
4BH	178	178	148	152	132	132	230	258	132	132
5BH	164	178	152	164					164	178
6BH	178	178	164	164	132	132	230	258	132	166
7BH	178	178	168	172	132	132	230	258	132	176
8BH	178	178	164	184	132	132	230	230	132	132
9BH	178	178	164	168	132	132	230	230	132	166
10BH	178	178	168	172	132	132	230	258	166	172
11BH	178	178	152	164	132	132	230	258	132	166
12BH	178	178	152	164	132	132	230	258	132	166
13BH	178	178	160	168	132	132	230	258	132	166
14BH	178	178	164	168	132	132	258	258	132	132
15BH	178	178	168	168	132	132	230	258	132	178
16BH	178	178	156	168	132	132	230	258	138	172
17BH	178	178	156	164	132	132	258	258	132	158
18BH	178	178	164	172	132	132	230	258	132	166
19BH	178	178			132	132	230	258		
20BH	178	178	152	164	132	132				
21BH	178	178	168	168	132	132	230	258	132	172
22BH	178	178	168	168	132	132	230	258	132	132
23BH	178	178	168	172	132	132	230	230	132	158
24BH	178	178	164	164	132	132	230	258	132	132
26BH	178	178	168	176	132	132	230	230	132	166
27BH	178	178	168	176	132	132	230	258	132	132
28BH	178	178	160	160	132	132	230	230	132	172
29BH	178	178	164	184	132	132	230	258	132	166
30BH	178	178	168	172	132	132	230	230	166	172
31BH	178	178	164	176	132	132	230	258	166	172
32BH	164	178	164	172	132	132	230	258	166	172

33BH	178	178	164	172	132	132	258	258	132	138
34BH	178	178	164	168	132	132	230	258	166	172
35BH	178	178	152	172	132	132	230	258	132	172
36BH	178	178	164	164	132	132	230	258	132	172
37BH	178	178	160	164	132	132	230	258	166	132

Appendix A Cont'd. Individual genotypes for newly created five loci for northern flying squirrels from the Black Hills.

Species ID	**Five loci**									
	GLSA12		GLSA22		GLSA48		GLSA52		GLSA65	
138BH	154	154	170	180	306		214	224	188	188
139BH	154	170	170	170	308	312	214	252	188	188
140BH	154	154	170	180	306		214	254	188	188
141BH	154	154	170	170	306	310	254	252	188	210
142BH	154	154	170	182	306		252	252	190	190
143BH	154	154	170	170	308	312	252	252	170	202
144BH					306	308				
145BH	154	154	170	182	308	312	214	252	188	188
146BH	154	170	170	170	306	308	252	254	210	170
147BH	154	154	170	170			214	252	188	210
148BH	154	154	168	170	308		214	252	188	188
149BH	154	154	170	170	306	310	252	252	210	188
150BH	136	154	170	188	306	312	214	224	188	188
151BH	154	154	170	188	306	308	214	252	188	210
152BH	154	154	170	170	306		214	252	188	188
153BH	154	170	170	188	306		214	224	188	188
154BH	154	154	170	188	306		214	252	170	188
155BH	136	154	170	172	312		214	254	188	210
156BH	154	154	170	170	306		214	224	188	206
157BH	154	154	170	170	306	308	214	252	188	210
158BH	154	154	170	170	306		214	252	170	188
159BH	154	154	170	172			214	252	188	210
38BH	154	154	170	170	306	306	252	254	188	188
39BH	154	154	170	170	306	306	252	252	188	188
40BH	154	154	170	182	306	308	214	252	188	208
41BH	154	154	170	170	306	308	252	252	188	188
42BH	170	170	170	170	306	306	252	252	188	188
43BH	154	154	170	170	306	306	252	252	188	188
44BH	154	154	170	170	308	312	252	254	188	188
45BH	154	154	170	182	306	306	214	252	188	188
46BH	154	154	168	170	304	308	252	252	188	208
47BH	154	154	170	170	308	308	214	252	188	188
48BH	154	154	170	170	306	306	252	254	188	188
49BH	154	154			308	312	214	252	188	188
50BH	154	154	170	170	308	308	254	254	188	188
51BH	154	154	170	180	306	306	252	254	188	188
52BH	154	154	170	170	306	308	214	252	188	188
53BH	154	154	170	170	306	308	252	252	188	188
54BH					308	308	252	252	188	188
55BH	154	154	170	170			252	252	188	188

56BH	154	154	170	170	308	308	252	254	188	188
57BH	154	154	170	170	306	306	252	254	188	188
58BH					308	308	252	252	188	188
59BH	154	154	170	170	308	308	252	252	188	188
60BH			188	188	306	308	214	252	188	208
61BH	154	154	170	170	310	312	214	252	188	188
62BH	154	154	170	170	306	308	252	254	188	188
63BH					306	306	252	254	188	188
64BH	154	154	170	170	306	306	252	254	188	208
65BH	154	154	170	170	306	306	252	252	188	188
66BH	154	154	170	170	306	312	252	252	188	188
67BH	154	154	170	170	306	308	252	252	188	188
68BH	154	154	170	170			214	254	188	188
69BH	154	154	170	188	306	306	214	252	188	208
70BH	154	154	170	170	306	306	214	252	188	188
71BH	154	154	170	172	306	306	252	252	188	188
72BH	154	154	170	188	306	306	214	252	188	188
73BH			170	170	308	308	214	252	188	188
74BH	154	154	170	170	306	306	212	252	188	208
75BH	154	154	170	180	306	312	214	252	188	188
76BH	154	154	170	170	306	308	214	252	188	188
77BH	154	154	170	170	308	308	252	252	188	188
78BH	154	154	170	178	308	308	214	252	188	188
79BH	154	154	170	170	306	306	214	252	188	208
80BH	154	154	170	170	308	308	214	252	188	208
81BH	154	154	170	170	306	306	252	252	188	188
83BH					306	308	214	252	188	188
87BH	154	170	168	170			220	252	188	188
88BH	154	154	170	170	308	308	252	252	188	188
89BH			170	170	306	308	252	254	188	188
91BH	154	154	170	170	306	308	252	252	188	188
92BH	154	154			306	308	252	254	188	188
93BH	154	154			308	308	252	254	188	188
94BH	154	154			304	310	214	252	188	188
95BH	154	154	170	170	306	310	252	252	188	188
96BH	154	154	170	170	306	306	252	252	188	188
97BH	154	154	170	170	306	310	214	252	188	188
98BH	154	154	170	170	306	306	214	252	188	208
99BH	154	154	170	170			252	252	188	208
100BH	154	154	170	170	306	306	252	254	188	188
101BH	154	154	170	170	308	310	214	252	188	188
102BH	154	154	170	170	306	308	214	252	188	188
103BH	170	170	170	170	306	306	252	252	188	188
104BH			170	170	306	306	252	254	188	188
105BH	154	154	170	170	306	306	214	252	188	210
106BH	154	154	170	170	306	308	214	218	188	188
107BH	154	154	170	170	306	306	252	252	188	188
108BH	154	154	170	170			252	254	188	188
109BH	154	154	170	172	308	312	252	252	188	188
110BH	154	154	170	170			252	254	188	188

111BH	154	154	170	180	306	308	214	252	188	188
112BH	154	154	170	172	306		252	252	188	188
113BH	154	170	170	170	306		252	252	188	188
114BH	154	154	170	170	306		252	252	188	188
115BH	154	154	170	170	306		252	254	188	188
116BH	154	154	170	170	294	308	252	252	188	188
117BH	154	154	170	170	306		252	252	188	188
118BH	154	154	170	170	306		252	252	188	188
119BH	154	154	170	170	306		252	252	188	188
120BH	154	154	170	170	308		252	252	188	188
122BH	154	154	170	178	306	308	252	252	188	188
123BH	136	154	170	188			216	220	188	188
124BH	154	154	170	170	308		252	254	188	188
125BH	154	170	170	170	306	312	252	252	188	188
126BH	154	154	170	170	308	310	252	252	188	188
127BH	154	154	170	170	306	308	252	252	188	188
128BH	154	154	170	170	306					
129BH	154	154	170	172	306		252	252	188	188
130BH	154	154	170	170	312	314	252	252	188	188
131BH	154	154	170	170			252	252	188	188
132BH	154	154	170	170	306	308	214	252	188	188
133BH	154	154	170	170	306		252	252	188	188
134BH	154	154	170	170	308		214	252	188	188
135BH	154	154	170	170	306	308	252	252	188	188
136BH	154	154			306	308	252	254	188	210
1BH	154	154	170	170			214	252	188	188
2BH	154	154	170	170			216	220	188	188
3BH							216	220	188	188
4BH	154	154	170	170	306	308	214	252	188	188
5BH	154	154	170	170			214	220	188	188
6BH	154	154	170	170	304	304	210	214	188	188
7BH	154	154	170	170	306	308	214	252	188	188
8BH	154	154	170	170	306	308	252	252	188	188
9BH	154	154	170	170	306	306	252	252	188	188
10BH	154	154	170	170	304	310	252	252	188	208
11BH	154	154	170	170	308	310	214	254	188	208
12BH	154	154	170	170	306	312	252	254	188	188
13BH	154	154	170	182	306	306	212	214	188	188
14BH	154	154	170	170	306	308	214	252	188	188
15BH	154	154	170	170	304	306	252	252	188	188
16BH										
17BH	154	154	170	170	306	308	214	252	188	188
18BH	154	154	170	170	306	308	252	254	188	188
19BH	154	154	170	172	306	312	214	252	188	188
20BH	154	154	170	182			214	254	188	188
21BH	154	154	170	170			214	252	188	188
22BH	154	154	170	180	304	304	214	252	188	208
23BH	154	154	170	180	304	306	212	214	188	188
24BH	154	154	170	170	304	310	252	252	188	188
26BH	154	154	170	170	306	306	252	252	188	188

27BH	154	154	170	170	306	306	252	254	188	188
28BH	154	154	170	170	306	308	214	252	188	208
29BH	154	154	170	180			214	252	188	188
30BH	154	154	170	170	304	312	252	254	188	188
31BH	154	154	170	170	308	308	252	252	170	188
32BH	154	154	170	170	304	306	214	252	188	188
33BH	154	154	170	170	306	306	252	252	188	208
34BH	154	154	170	170	306	306	252	252	188	188
35BH	154	154	170	170			212	252	188	188
36BH	154	154	170	170	306	308	212	252	188	188
37BH	154	154	170	182	306	306	214	252	188	188

Appendix B. Individual genotypes of five published loci from northern flying squirrels populations (pop) outside of the Black Hills. See Ch. 5 for population abbreviations.

Pop	**Five Loci**									
	FLS1		FLS6		GS13		GS2		GS4	
AF	178	178	160	164	132	132	230	258	132	172
AF	178	178	160	164	132	132	230	258	132	172
AF	178	178	156	160	132	132	258	258	132	166
AF	178	178	160	164	88	132	258	258	172	172
AF	178	178	160	160	100	132	258	258	132	172
AF	178	178	160	164	100	132	258	258	166	172
AF	178	178	156	160	132	132	230	258	166	172
AF	178	178	152	152	132	132	230	258	132	166
AF	178	178	156	160	132	132	230	258	132	164
AF	178	178	156	160	132	132	258	258	132	166
AF	178	178	160	164	132	132	230	258	132	172
AF	178	178	160	164	80	132	258	258	132	166
AF	178	178	160	164	132	132	230	258	132	162
AF	178	178	160	164	80	132	258	258	132	162
AF	178	178	160	164	132	132	258	258	166	172
BL	178	178	152	156	132	132	258	258	132	132
BL	178	178	156	160	132	132	230	258	166	172
BL	178	178	152	164	132	132	230	258	166	166
BL	178	178	152	156	132	132	230	258	132	166
BL	178	178	152	152	82	132	230	258	166	172
BL	178	178	160	164	84	132	258	258	162	162
BL	178	178	160	164	132	132	230	258	132	172
BL	178	178	156	160	132	132	258	258	132	166
BL	178	178	156	160	132	132	258	258	166	172
BL	178	178	160	164	132	132	230	258	166	172
BL	178	178	156	160	132	132	230	258	132	166
BL	178	178	152	156	132	132	230	258	166	184
BL	178	178	164	168	132	132	230	258	166	166
BL	178	178	160	164	132	132	230	258	166	172
BL	178	178	156	160	84	132	258	258	166	172
BL	178	178	164	168	132	132	230	258	166	166
BL	178	178	156	188	80	132	230	258	166	172
CV	178	178	152	156	132	132	258	258	166	172
CV	178	178	152	172	132	132	230	258	166	172
KF	178	178	160	164	80	132	258	258	166	172
KF	178	178	186	186	132	132	230	258	166	172
KF	178	178	160	186	132	132	230	258	166	166
KF	178	178	160	164	132	132	230	258	166	172
KF	178	178	156	160	132	132	230	258	166	172
KF	178	178	164	186	132	132	230	258	166	172
KF	178	178	160	176	82	132	230	258	166	166
KF	178	178	160	164	132	132	230	258	132	172
KF	178	178	160	164	132	132	230	258	166	172
KF	178	178	172	172	82	132	230	258	166	172
NH	178	178	154	172	132	132	230	258	166	172
NH	178	178	160	164	132	132	230	258	166	166
NH	178	178	160	164	132	132	230	258	166	166
NH	178	178	160	164	132	132	230	258	132	166

NH	178	178	160	164	80	132	230	258	166	172
NH	178	178	160	164	132	132	230	258	166	172
NH	178	178	160	164	132	132	230	258	166	172
NH	178	178	160	164	132	132	230	258	166	172
NH	178	178	160	164	132	132	230	258	166	166
NH	178	178	160	164	132	132	230	258	166	166
NH	178	178	160	164	132	132	230	258	166	172
NH	178	178	160	164	124	132	258	258	166	166
NH	178	178	160	164	84	132	230	258	132	166
NH	178	178	160	164	132	132	230	258	166	166
NH	178	178	160	164	132	132	258	258	166	166
NH	178	178	160	164	132	132	204	258	166	172
NH	178	178	160	164	132	132	258	258	166	172
NH	178	178	168	172	132	132	258	258	166	172
PF	178	178	160	164	80	132	230	258	166	172
FSE	178	178	160	164	132	132	230	258	166	166
FSE	178	178	168	168	82	132	230	258	166	166
FSE	178	178	160	172	132	132	230	258	166	172
FSE	178	178	160	168	82	132	230	258	166	172
SF	178	178	160	164	132	132			166	172
SF	178	178	160	164	132	132	258	258	132	132
SF	178	178	164	164	100	132	230	258	166	132
SF	178	178	160	168	132	132	230	258	166	172
CN	178	178	168	172	132	132	230	258	132	166
CN	178	178	168	172	132	132	258	258	166	166
CN	178	178	168	172	132	132	230	258	166	172
CN	178	178	168	172	132	132	230	258	166	132
CN	178	178	168	172	132	132	230	258	168	172
CN	178	178	168	172	132	132	230	258	132	166
CN	178	178	168	172	132	132	258	258	172	166
CN	178	178	168	172	132	132	230	258	132	166
OR	178	178	168	172	132	132	230	230	166	172
OR	178	178	168	172	132	132	230	258	166	172
OR	178	178	168	172	132	132	230	258	132	166
FSW	178	178	196	196	132	132	230	258	166	166
FSW	178	178	156	160	132	132	230	258	166	172
FSW	178	178	160	172			258	258	166	166
FSW	178	178	156	164	132	132	230	230	166	172
FSW	178	178	156	164			230	258	166	172
FSW	178	178	160	178	132	132	230	230	166	172

Appendix B Cont'd. Individual genotypes of five created loci from northern flying squirrels populations (pop) outside of the Black Hills. See Ch. 5 for population abbreviations.

Pop	**Five Loci**									
	GLSA12		GLSA22		GLSA48		GLSA52		GLSA65	
AF	154	154	170	176	306	306	230	254	188	188
AF	154	154	170	176	306	306	254	254	188	196
AF	154	154	176	176	306	306	254	254	188	188
AF	154	154	176	178					188	188
AF					306	306			188	188
AF	154	154	170	170	306	306	220	252	188	188

AF	154	154	170	170	306	306	220	254	188	188
AF	154	154	170	176	306	306	252	258	188	188
AF	154	154	170	176	306	306	252	254	188	188
AF	154	154	176	176	306	306	220	254	188	188
AF	154	154	176	176	306	306	220	254	188	188
AF	154	154	170	176	306	306	252	252	188	188
AF	154	154	170	176	306	306	254	254	188	188
AF	154	154	170	176	306	306	254	254	188	188
AF	154	154	176	176	306	306	220	254	188	188
BL	154	170	170	170	306	306	214	252	188	210
BL	154	154	170	182	306	306	252	254	188	208
BL	154	154	170	170	306	306	214	252	188	188
BL	154	154	170	170	308	308	252	252	188	188
BL	154	154	170	170	306	308	252	252	188	188
BL	154	154	170	170	308	308	254	254	188	188
BL	154	154	170	170	308	308	252	254	188	188
BL	154	154	170	170	308	308	254	252	188	208
BL	154	154	170	170	308	308	252	254	188	188
BL	154	154	170	170	306	308	252	252	188	188
BL	154	154	170	170	306	306	252	214	188	208
BL	154	154	170	170	306	308	252	252	188	188
BL	154	154	170	170	300	308	254	254	188	188
BL	154	170	170	170	300	306	252	254	188	188
BL	154	154	170	170	306	308	252	252	188	188
BL	154	154	170	170	306	306	252	254	188	188
BL	154	154	170	170	300	308	252	252	188	188
CV	154	154	170	178			254	256	188	188
CV	154	166	170	176			254	256	188	188
KF	154	154	170	170	314	316	214	220	188	188
KF	154	154	170	176	314	314	252	254	188	188
KF	154	170	170	170	310	312	254	254	188	188
KF	166	166	174	176	314	314	252	254	188	188
KF	154	166	170	176	314	314	254	254	188	188
KF	154	154	170	176	288	310	212	214	188	188
KF	154	154	170	174			212	254	188	188
KF	154	166	170	172	305	314	212	218	188	208
KF	154	154	170	176	312	312	252	254	188	208
KF	154	154	176	176	310	312	254	254	188	210
NH	166	166	174	176	312	326	254	254	188	188
NH	136	150	172	174	300	314	252	252	190	202
NH	136	154	170	174	314	314	252	252	186	190
NH	136	154	174	174	314	316	248	250	190	202
NH	136	150	164	170	300	340	252	252	186	190
NH	136	150	174	176	312	316	254	254	186	190
NH	136	154	170	174	300	340	248	250	186	190
NH	136	154	172	176	300	304	250	252	186	204
NH	136	154	174	174	312	314	252	256	186	190
NH	136	136	174	174	300	340	248	252	186	190
NH	136	154	170	174	310	314	252	256	186	190
NH	136	150	172	174	310	312	250	252	174	184

NH	136	154	166	174	314	316	256	252	190	202
NH	136	150	174	174	300	316	250	252	186	190
NH	150	150	174	174	300	340	252	256	186	190
NH	136	150	170	174	312		250	252	188	202
NH	136	150	170	172	312	316	214	252	188	188
NH	156	166	172	178	300	312	214	220	188	202
PF	154	154	170	176	314		252	256	188	188
FSE	166	166	174	176	312	314	250	254	188	188
FSE	166	166	172	176	312	314	254	256	188	188
FSE	154	166	174	176	300	312	252	254	188	188
FSE	154	166	170	178	312	312	252	252	188	188
SF	154	154	170	176	306	340	252	254	188	188
SF	154	154	176	176	306	306	252	252	188	188
SF	154	154	170	176	306	306	252	254	188	188
SF	154	154	170	176	306	306	252	254	188	188
CN	166	166	172	176	312	312	212	216	188	188
CN	136	154	170	172	312	320	212	216	188	188
CN	154	166	158	172	312	314	212	216	188	188
CN	166	154	170	172	314	322	214	218	186	190
CN	154	160	170	174	312	314	220	220	186	202
CN	136	154	170	174	300	340	214	220	188	188
CN	136	154	176	172	312	312	254	256	188	188
CN			174	174	314	316	214	216	188	188
OR	136	150	174	174	312	316	212	214	188	188
OR	136	136	172	176	316	320	214	254	188	208
OR	136	150	172	174	314	316	210	214	188	206
FSW	160	160	174	176	326	328	214	218	188	208
FSW					306	306	254	254	188	188
FSW	136	154	170	176	306	306	254	254	188	188
FSW	154	154	174	174	306	306	214	252	188	210
FSW	154	154	174	176	306	308	214	254	188	210
FSW	154	154	176	176	300	300	214	254	188	210

Appendix C. Matrix genetic distances (i.e., Nei's distances) between northern flying squirrel populations based on microsatellite data.

AF	0.00000	0.13560	0.18995	0.20637	0.34945	0.23241	0.29775	0.06041	0.37575	0.48712	0.19012	0.17385
BL	0.13560	0.00000	0.20112	0.21038	0.32989	0.25362	0.29418	0.13796	0.36897	0.46684	0.18604	0.06693
CV	0.18995	0.20112	0.00000	0.18527	0.34247	0.23415	0.19371	0.23943	0.25170	0.39118	0.22899	0.24376
KF	0.20637	0.21038	0.18527	0.00000	0.23467	0.18009	0.14674	0.20937	0.21588	0.31199	0.20320	0.20035
NH	0.34945	0.32989	0.34247	0.23467	0.00000	0.28455	0.20176	0.30978	0.22829	0.28937	0.29224	0.30752
PF	0.23241	0.25362	0.23415	0.18009	0.28455	0.00000	0.23727	0.20823	0.36937	0.48856	0.30877	0.28144
FSE	0.29775	0.29418	0.19371	0.14674	0.20176	0.23727	0.00000	0.25227	0.20301	0.31633	0.27391	0.27458
SF	0.06041	0.13796	0.23943	0.20937	0.30978	0.20823	0.25227	0.00000	0.35120	0.45108	0.19316	0.14217
CN	0.37575	0.36897	0.25170	0.21588	0.22829	0.36937	0.20301	0.35120	0.00000	0.18457	0.31444	0.29727
OR	0.48712	0.46684	0.39118	0.31199	0.28937	0.48856	0.31633	0.45108	0.18457	0.00000	0.34134	0.39692
FSW	0.19012	0.18604	0.22899	0.20320	0.29224	0.30877	0.27391	0.19316	0.31444	0.34134	0.00000	0.22132
BH	0.17385	0.06693	0.24376	0.20035	0.30752	0.28144	0.27458	0.14217	0.29727	0.39692	0.22132	0.00000

Appendix D. Individual genotypes of five loci from red squirrels in the Black Hills.

Species ID	Five Loci									
	Thu3		Thu8		Thu14		Thu21		Thu23	
1BH	228	228	306	308	278	268	163	165	192	192
2BH	220	228	306	308	264	266	161	163	192	19
3BH	220	228	302	318	256	264	163	165	182	192
4BH	238	232	306	310	264	264	159	161	192	192
5BH	220	220	310	310	264	264	163	165	192	192
6BH	220	228	306	308	266	266	165	165		
7BH	232	232	312	318			163	165	192	192
8BH	228	236			264	264	163	163	192	192
9BH	216	238	304	318	264	264	165	165	192	192
11BH	216	238	308	312	268	268	163	165	192	196
12BH	228	228	308	314	264	264	165	165	182	192
13BH	220	228	302	310	264	266	161	163	192	192
14BH	232	232	308	310	258	264	157	157	192	192
15BH	238	238	302	308	264	278	157	157	196	192
16BH	238	238	308	310	264	264	163	167	190	190
17BH	220	228	310	310	264	274	157	165	186	190
19BH	228	228	310	314	266	268	165	161	190	192
20BH	220	228	308	308	264	268	159	161	192	192
21BH	228	228			268	268	163	167	192	192
22BH	232	238	308	308	264	268	163	163	192	194
23BH	228	238	312	312	264	264	165	165	192	192
24BH	228	228	312	308	258	268	163	165	182	194
25BH	228	228	310	312	264	268	163	165	182	190
26BH	216	222	308	310	268	268	161	163	190	192
27BH	216	228	302	312	266	266	159	163	192	192
28BH	228	228	302	302	258	264	163	165	192	192
29BH	216	228	310	310	266	268	163	165	192	192
30BH	228	228	302	302	264	264	163	165	192	192
31BH	222	228	308	308	264	264	159	163	190	192
32BH	228	228	308	312	274	278	159	165	188	192
33BH	228	230	308	308	264	264	161	163	184	192
34BH	220	228	308	310	258	274	165	167	190	184
35BH	220	220	308	308	274	274	163	165	192	192
36BH	228	230	306	310	272	274	163	167	182	192
37BH	228	228	308	306	266	274	163	165	192	192
38BH	216	236	312	312	264	264	163	165	192	196
39BH	228	228	308	310	264	268	163	165	182	190
40BH	228	228	304	308	264	264	163	167	182	184
41BH	228	228	306	308	256	258	167	167	184	190
42BH	220	236	302	308	264	264	159	165	182	192
43BH	220	220	302	312	264	278	161	165	192	192
44BH	228	228	308	312	264	266	163	165	192	192
45BH	228	230	302	308	264	278	159	163	192	192
46BH	220	228	306	310	264	264	159	159	182	190
47BH	228	228	302	308	264	264	163	165	192	192
48BH	220	228	302	310	264	266	161	163	192	192
49BH	228	228					163	165	192	192

85BH	220	238	308	308	264	266	163	163	192	192
121BH	228	232	302	308	264	272	163	165	192	192
124BH	220	238	308	310	266	268	161	163	192	192
126BH	220	232	310	312	266	266	165	165	192	192
128BH	232	236	308	308	258	264	165	163	184	192
129BH	220	220	306	312	268	274	163	163	192	192
131BH	228	228	310	310	264	268	163	163	182	192
132BH	232	232	308	308	256	264	165	167	192	192
133BH	228	228	310	310	266	278	165	165	192	192
134BH	232	232	302	302	274	278	159	165	182	192
RS1	222	228	308	308	268	268	163	167	192	192
RS2	222	228	306	308	258	264	163	167	182	190
RS3	220	228	306	308	258	268	159	163	182	182
RS4			308	308			157	163	192	192
RS5	230	230	308	310	258	274	163	163	192	192
RS6			302	306	258	264	163	165	192	192
RS7	220	238	302	308	266	266	159	164	192	192
RS9	220	232	302	308	256	264	165	165	182	192
51BH	230	230	308	306	266	268	165	165	184	192
52BH	230	234	308	310	266	278	157	159	192	192
53BH	230	234	308	310	266	274	165	165	182	182
54BH	230	230	310	312	274	274	165	163	190	192
55BH	230	230	308	310	266	268	165	165	182	182
56BH	220	220	308	312	258	266	165	165	192	192
57BH	220	230	308	308	266	268			192	192
58BH	220	238	310	310	266	268	165	165	192	192
59BH	230	238	308	310	268	274	165	165	192	192
60BH	220	220	310	310	268	274	165	165	192	192
61BH	232	238	312	310	268	270	159	163	192	192
62BH	230	234	308	312	266	278	159	159	192	192
63BH	230	230	310	318	272	278	163	165	184	192
64BH	230	232	302	312	266	266	159	165	192	192
65BH	230	232	308	308	266	266	163	165	192	192
66BH	230	232	310	312	274	274	165	167	192	192
67BH	220	238	308	308	258	272	159	163	186	192
68BH	230	236	310	312	266	266	163	163	192	192
69BH	230	232	302	318	266	268	159	163	192	192
70BH	230	232	308	312	258	268	159	163	182	184
71BH	220	238	306	312	266	274	159	163	192	192
72BH	232	238	308	308	266	274	165	165		
73BH	230	232	306	318	268	268	163	163	192	192
74BH	230	238	310	310	266	278	163	163	182	192
75BH	230	230	310	312	258	274	165	167	192	192
76BH	230	238	308	310	266	274	159	159	192	192
77BH	220	238	302	308	266	266	163	163	192	192
78BH	230	230	308	312	266	266	163	163	192	192
79BH	220	238	302	310	270	274	163	165	192	192
80BH	220	230	308	310	258	270	159	165	192	192
81BH	230	238	308	308	266	270	159	165	184	192

Appendix D Cont'd. Individual genotypes of five loci from red squirrels in the Black Hills.										
Species ID	**Five Loci**									
	Thu25		Thu31		Thu32		Thu33		Thu37	
1BH	187	191	122	122	271	271	147	147	157	157
2BH	183	183	122	136	271	271	147	147	157	157
3BH	187	187	122	122	271	271	147	147	157	163
4BH	187	189	122	134	271	281	153	153	157	181
5BH	187	187	128	134	271	271	147	153	157	181
6BH	187	187	138	142	271	271	153	167	157	157
7BH	183	187	130	136	271	271			157	157
8BH	183	187	134	136	271	271	137	143	157	157
9BH	187	187	128	136	271	271	133	137	157	165
11BH	187	187	136	136	271	271	147	147	163	163
12BH	187	187	130	136	271	271	151	153	157	157
13BH	183	187	122	122	271	271	147	147	157	157
14BH	187	187	122	136	271	271	147	147	157	157
15BH	183	187	128	134	271	271	147	147	157	157
16BH	187	187	122	122	271	271	153	153	157	181
17BH	183	189	134	136	271	271	147	147	157	181
19BH	187	187	134	136	271	271	145	145	157	181
20BH	187	187	134	138	271	271	153	153	157	157
21BH	183	187	134	136	271	271	157	167	157	181
22BH	183	183	130	134	271	271	147	143	157	157
23BH	187	189	132	136	271	271	147	147	157	181
24BH	187	187	132	132	271	271	147	153	157	157
25BH	187	187	134	136	271	271	143	145	157	157
26BH	187	187	122	138	271	271	153	153	157	181
27BH	183	187	122	132	271	271	147	151	157	157
28BH	183	187	122	134	271	271	153	153	157	157
29BH	183	183	132	134	271	271	137	147	157	157
30BH	183	187	130	132	271	271	147	147	163	163
31BH	187	187	132	134	257	271	147	147	157	157
32BH	183	187	122	138	271	271	143	145	157	181
33BH	183	187	122	132	271	281	147	147	157	157
34BH	183	187	122	134	271	271	149	149	157	157
35BH	183	187	136	136	271	271	147	147	157	157
36BH	183	187	134	136	271	271	153	153	157	157
37BH	187	187	122	132	271	281	147	147	157	181
38BH	187	191	134	134	271	277	147	147	157	157
39BH	187	187	122	134	271	271	133	145	157	157
40BH	183	183	122	132	271	281	151	167	157	157
41BH	183	187	122	132	271	271	145	147	157	157
42BH	183	183	128	134	271	271	147	147	157	157
43BH	183	187	132	142	271	279	147	147	157	157
44BH	187	187	128	138	271	271	147	147	157	157
45BH	183	187	132	136	271	271	147	147	157	157
46BH	183	187	130	134	271	271	147	149	157	157
47BH	183	187	122	132	271	279	147	147	157	157
48BH	183	187	122	122	271	271	147	147	161	161
49BH	187	187	128	136	271	271	147	147	163	163

85BH	183	187	130	136			153	153	157	181
121BH	187	187	128	138	271	271	137	137	157	181
124BH	187	187	128	134	271	271	153	153	157	157
126BH	187	187	132	132	271	271	151	151	157	157
128BH	187	187	122	122	271	279	151	151	157	157
129BH	187	187	134	136	271	271	137	143	157	157
131BH	183	187	122	122	271	271	143	145	157	157
132BH	187	187	122	132	271	271	143	147	157	165
133BH	183	187	130	138	271	271	147	147	157	157
134BH	183	183	122	122	271	271	147	147	157	157
RS1	187	187	130	138	271	271	147	147	157	157
RS2	183	187	122	134	271	271	147	153	157	157
RS3	183	183	122	136			153	157	157	181
RS4	187	187	136	136			147	147	157	157
RS5	183	183	122	136	271	271	153	153	157	157
RS6	187	183	122	134	271	277	153	153	157	157
RS7	183	183	132	134	271	271	147	153	157	157
RS9	187	183	128	134	271	271	157	157	157	157
51BH	187	187	122	132	257	281	151	151	157	163
52BH	187	187	122	132	271	271	149	153	157	157
53BH	183	187	122	128	271	275	151	151	157	157
54BH	187	187	138	138	271	271	153	155	157	157
55BH	183	187	128	128	257	271	143	143	157	165
56BH	187	187	132	132	271	271	145	173	157	157
57BH	183	183	128	132			149	149	157	157
58BH	183	187	128	134	271	271			157	165
59BH	187	187	134	138	271	271	147	173	157	157
60BH	187	187	132	132	271	273	153	153	157	165
61BH	187	187	132	132	271	271	147	173	157	181
62BH	183	187	122	122	271	271	147	155	157	157
63BH	183	183	136	138	271	271	147	147	157	157
64BH	187	187	122	136	271	271	173	173	157	157
65BH	187	187	122	132	271	271	173	173	157	157
66BH	187	187	122	138	271	271	173	173	157	181
67BH	187	187	122	134	271	271	141	173	157	181
68BH	183	187	122	134	271	271	155	173	157	157
69BH	187	187	132	132	271	271	173	173	157	181
70BH	187	187	132	132	271	275	147	155	157	157
71BH	187	187	132	136	271	271			157	157
72BH	183	187	122	134	271	271			157	157
73BH	187	187	136	134	271	273			157	157
74BH	183	187	122	134	277	281	147	155	157	163
75BH	183	187	122	138	271	271			157	181
76BH	183	183	128	132	271	277			157	159
77BH	183	187	122	136	271	271	151	151	157	157
78BH	187	187	122	132	271	271			157	157
79BH	187	187	128	132	271	271	147	173	157	157
80BH	183	187	132	138	271	271			157	157
81BH	183	187	122	132	271	271	147	153	157	157

Appendix D Cont'd. Individual genotypes of six loci from red squirrels in the Black Hills.

Species ID	**Six Loci**											
	Thu38		Thu41		Thu42		Thu50		Thu55		Thu59	
1BH	296	298	259	259	232	252	279	279	256	266	100	108
2BH	298	298	229	259	254	254	279	287	256	268	98	100
3BH	296	298	259	259	232	252	279	279	266	266	100	100
4BH	292	298	259	259	252	266	279	279	292	292		
5BH	292	296	259	259	232	256	279	279	266	270	98	98
6BH					250	254	279	279			98	106
7BH	294	298			232	254	279	279	266	294	112	112
8BH	296	298	259	259	232	254	287	287	268	268	108	108
9BH	292	298	259	261	232	252	279	279	256	266	106	106
11BH	298	298	269	269	232	254			266	266	100	100
12BH	298	298	229	257	232	252	279	279	266	266	108	108
13BH	298	298	259	259	232	252	279	279	266	266	106	106
14BH	298	298	229	229	252	256	279	287	256	266	104	108
15BH	292	298	259	259	256	256	279	279	256	266	108	108
16BH	298	298	259	259	252	252	279	283	266	266	98	112
17BH	298	298	259	259	252	256	279	279	266	266	108	108
19BH	292	296	259	259	248	250	279	287	266	292	100	208
20BH	298	298			254	256	279	279	266	270	108	108
21BH	292	298	259	259	254	256	279	279	266	270	98	112
22BH	298	298	259	259	232	254	279	287	266	266	106	108
23BH	292	298	259	269	232	250	279	279	266	292	100	108
24BH	296	296	259	259	252	254	279	279	256	268	98	108
25BH	296	298	259	259	232	256	279	287	256	266	104	112
26BH	296	298			252	254	279	283	266	270	98	98
27BH	292	296	259	269	232	254	279	279	266	270	108	108
28BH	298	298	259	259	248	250	279	283	266	266	108	112
29BH	292	296	259	259	252	256	279	279	266	266	108	108
30BH	298	298	259	259	254	254	279	283	266	266	108	108
31BH	296	296	259	269	252	256	279	283	266	268	104	108
32BH	292	298	259	259	232	254	279	279	266	268	84	98
33BH	298	298	259	259	250	254	279	287	266	266	112	112
34BH	298	298	259	259	254	256	279	279	266	270	100	108
35BH	296	298			252	256	279	287	266	266	104	108
36BH	292	292	259	259	252	256	279	279	256	266	98	108
37BH	298	298	259	259	232	256	283	287	266	266	98	108
38BH	298	298	259	259	256	256	279	279	266	266	108	108
39BH	292	296	259	259	232	256	279	279	266	266	106	108
40BH	294	298	269	269	252	254	279	279	266	266	100	108
41BH	292	292	259	259	252	256	279	279	256	266	100	100
42BH	296	298	259	259	252	252	279	279	266	266	104	112
43BH	298	298	259	259	232	254	279	279	266	266	98	104
44BH	296	296	259	269	232	232	279	287	266	266	98	98
45BH	298	298	259	259	256	256	287	283	266	268	100	108
46BH	292	296	259	259	232	254	279	279	266	256	98	110
47BH	294	298	259	259	256	256	279	287	266	266	98	108
48BH	298	298	259	259	232	252	279	279	266	266	106	106
49BH	296	296	259	269	254	256	279	287	266	266	98	98

85BH	298	298	259	259	254	254	279	287	266	266	108	112
121BH	296	298	259	259	252	256	279	279	266	266	108	108
124BH	296	298	259	261	232	256	279	279	256	266	108	108
126BH	298	298	259	259	254	258	279	279	266	268	98	108
128BH	296	296	229	229	256	256	279	279	268	266	100	108
129BH	296	296	259	259	232	232	279	287	266	268	98	108
131BH	296	298	259	259	248	252	279	287	266	266	100	100
132BH	292	296	259	259	232	256	279	283	256	266	108	108
133BH	298	298	259	259	252	254	281	287	266	266	98	112
134BH	294	296	259	259	248	252	279	279	266	268	108	108
RS1	296	298	259	259	254	254	279	279	266	266	110	110
RS2	292	298	259	259	232	254	279	279	266	266	98	98
RS3	298	298	259	259			279	279	266	266	108	108
RS4	292	298	259	259					266	266	98	98
RS5	298	298	259	259	232	254	279	287	266	266		
RS6	298	298	259	259	252	254	279	279	266	266	108	108
RS7	298	298	259	259	254	254	279	281	266	266	108	110
RS9	296	298	259	259	232	256	279	279	256	266	98	108
51BH	298	298	229	269	252	252	281	283	266	266	98	98
52BH	298	298	259	259	256	256	281	281	266	270	108	108
53BH	292	298	229	259	252	252	279	279	266	266	108	110
54BH	294	298	229	259	250	256	281	287	266	266	98	104
55BH	298	298	259	259	256	252	281	281	270	270	108	112
56BH	298	298	259	269	254	254	283	283	256	266	104	104
57BH	298	298			232	256	279	279	256	266	98	98
58BH	296	298	259	259	232	254	283	283	266	270	98	112
59BH	296	298	259	259	232	254	279	279	266	268	84	108
60BH	298	298	229	259	250	254	281	281	266	270	98	104
61BH	296	298	259	259	252	256	279	283	266	266	100	104
62BH	292	298	229	229	254	256	279	281	266	266	104	108
63BH	292	298	229	259	232	232	279	279	266	266	102	108
64BH	298	298	259	259	232	252	279	279	256	266	98	106
65BH	298	298	229	259	248	252	277	281	266	270	100	108
66BH	292	292	229	259	252	254	279	283	266	266	98	108
67BH	298	298	259	259	232	254	281	287	266	266	108	110
68BH	298	298	271	271	252	256	279	279	266	266	104	106
69BH	296	298	259	259	254	256	281	283	266	268	108	108
70BH	296	298	259	259	256	256	279	287	266	268	98	98
71BH	298	298	259	269	252	254	279	279	266	266	102	110
72BH	296	298	261	261	232	256	283	283	256	266	104	104
73BH	296	298	259	269	252	254	279	279	266	266	100	102
74BH	298	298	259	259	254	254	285	285	266	266	98	108
75BH	292	298			254	256	279	279	266	266	98	108
76BH	296	298	259	259	232	256	279	279	266	266	98	108
77BH	296	298	259	259	232	252	279	287	256	270	98	112
78BH	296	298	259	259	254	256	279	287	256	266	108	108
79BH	296	298	229	229	252	256	279	279	256	266	108	108
80BH	298	298	259	259	254	254	281	283	256	266	98	98
81BH	296	298	259	259	252	254	279	279	266	266	100	100

Appendix E. Individual genotypes of five loci from red squirrels populations (pop) outside of the Black Hills. See Ch. 8 for population abbreviations.

Pop	**Five Loci**									
	Thu03		Thu08		Thu14		Thu21		Thu23	
CV	222	234	292	310	278	268	151	153	176	186
CV	222	234	292	310	264	266	151	153	176	186
CV	220	220	300	304	256	264	153	165		
CV	216	230	300	310	264	264	153	155	176	182
CV	232	234	286	302	264	264	153	155	186	186
CV	222	230	288	302	266	266	151	161	176	190
NH	220	226	294	296			153	161	178	178
NH			290	308	264	264	153	167	170	182
NH	222	234	288	308	264	264	155	161	186	192
NH			286	286	268	268			190	190
NH	218	230			264	264	157	157	176	192
NH	214	230	284	284	264	266	155	157	180	192
PB					258	264	151	165		
PB	216	216	288	288	264	278	151	159	182	186
PB	224	232	292	308	264	264	153	163	184	186
PB					264	274	155	165		
PB	224	226	292	308	266	268	151	163	180	186
PB					264	268	155	161	186	186
PB	220	226	300	308	268	268	157	165	178	188
PB	224	230	300	320	264	268	159	165	172	190
PB	226	226	292	308	264	264	151	163		
PB	230	238	292	310	258	268	161	169	182	194
RSE	230	232	304	308	264	268	151	159	178	178
RSE	230	230	290	292	268	268	155	157	172	180
BL	230	232	312	314	266	266	159	163	182	190
BL	228	236	308	308	258	264	163	165	192	192
BL	230	238	256	256	266	268	159	163	192	194
BL	220	230	302	312	264	264	163	165	192	194
BL	220	220	226	308	264	264	165	165	192	192
BL	220	228	308	312	274	278	163	167	182	190
BL	228	228	306	308	264	264	165	167	192	192
BL	228	238	302	316	258	274	163	165	192	192
BL	220	228	308	308	274	274	165	167	182	190
BL	220	230	310	310	272	274	163	163		
BL	220	220	308	310	266	274	163	165	190	190
BL	220	228	308	312	264	264	163	167	184	190
BL	228	230	302	308	264	268	163	165	192	192
BL	220	228	308	308	264	264	163	163	192	192
BL	220	230	308	310	256	258	165	169	192	192
BL	220	228	302	308	264	264	163	167	192	194
BL	228	228	306	306	264	278	163	165	190	194
BL	220	228	310	312	264	266	163	163	192	196
BL	228	228	310	312	264	278	163	165	182	192
BL	220	228	308	308	264	264	163	163	192	192
BL	228	228	308	310	264	264	163	163	192	194

BL	220	238	308	308	264	266	163	167	192	192
BL	228	230	310	318			161	163	192	192
LM					264	266	155	159		
LM	228	228			264	272	157	159	182	182
LM	228	228	268	268	266	268	157	159		
LM	228	228	218	258	266	266	157	159		
LM			308	308	258	264	157	159		
LM	228	228	302	304	268	274	157	157		
OR					264	268	157	163		
OR	222	232	286	286	256	264			166	188
OR			302	308	266	278				
OR			266	266	274	278				
OR	232	232	316	316	268	268	165	167	180	180
OR					258	264	155	165		
OR	224	234	286	318	258	268	159	159	184	188
OR	232	230	308	312			155	157	180	186
OR	230	230	302	314	258	274	155	159	176	190
OR	222	230			258	264	159	159	180	180
OR	222	222	208	208	266	266	151	155	178	182
OR	222	222	208	208	256	264	155	159	182	190
OR	244	244	290	290	266	268	153	165	182	184
OR			248	248	266	278			176	188
OR	222	226	292	300	266	274	159	159	186	188
OR			290	318	274	274	153	159	186	186
OR	226	234	286	286	266	268	155	157	188	192
OR	218	226	292	294	258	266	155	157	184	190
OR	224	232	214	214	266	268	161	165	184	194
OR	218	234	212	294	266	268	155	161	184	188
OR	226	226	286	302	268	274	157	159	184	186
AF	226	226	304	308	268	274	159	161		
AF	228	228	256	256	268	270	159	159		
AF			308	308	266	278	157	159		
AF			300	300	272	278	155	159		
BF	216	216	302	302	266	266	157	163		
BF	222	232	302	306	266	266	157	159		
BF	216	232	302	302	274	274	161	163		
BF	222	224	302	304	258	272	159	159		
BF	216	216	302	318	266	266	157	163		
BF					266	268	161	163		
BF	220	224	306	312	258	268	155	157		
KF	218	220	304	304	266	274	163	163		
KF	220	220	308	310	266	274	161	165	176	180
KF	218	220	312	312	268	268	163	163	176	176
KF	216	218	306	318	266	278	155	163	176	176
KF	218	220	312	314	258	274	157	163	176	184
PF	220	220	306	314	266	274	157	163		
PF	218	220	312	314	266	266	157	163		
PF	218	220	308	312	266	266	161	163		
PF	218	220	310	318	270	274			186	186
PF					258	270	165	165		

PF	220	220	306	306	266	270	157	167
PF					266	274	155	161
SF	220	228	310	310	266	274	159	163
SF	220	232	308	314	268	268	157	163

Appendix E Cont'd. Individual genotypes of five loci from red squirrels populations (pop) outside of the Black Hills. See Ch. 8 for population abbreviations.

Pop	**Five Loci**									
	Thu25		Thu31		Thu32		Thu33		Thu37	
CV	187	189	126	128	265	267	155	155	179	181
CV	187	189	124	126	265	267	155	155	179	181
CV	183	195	122	132	275	281	143	159	159	165
CV	175	195	130	134	271	275	153	157	157	181
CV	185	191	130	132	265	265	153	159	159	165
CV	185	193	126	128	273	277	149	149	157	159
NH	183	189	122	130	255	273	149	153	157	181
NH	183	193	122	134	275	277	153	155	157	159
NH	183	183	122	134	281	281	147	147	169	169
NH	183	187	130	132	271	271			157	157
NH	187	193	120	128	267	273	151	141	157	157
NH	183	187	124	132	269	289	151	153	157	179
PB	189	195	122	134			151	151	157	181
PB	189	189	122	130	275	279			157	159
PB			124	128			147	159	157	157
PB	183	189	120	130			137	143	157	157
PB	183	187	122	124	271	275	155	157	157	157
PB	187	187	118	128	265	273	151	163	157	159
PB	183	189	120	130	275	279	151	157	157	157
PB	189	201	128	128	257	279			157	157
PB	183	187	122	124	271	275	155	157	157	157
PB	183	187	128	130	255	279	155	155	157	159
RSE	185	195	120	124	267	287	153	155	159	161
RSE	185	187	122	128	277	281	151	157	159	169
BL	183	187	122	134	271	271	155	155	157	181
BL	183	183	122	122	271	273	147	147	157	159
BL	183	187	122	130	271	271	147	153	157	157
BL	187	187	132	138	271	281	147	147	157	157
BL	183	187	122	134	271	271	153	153	157	157
BL	183	183	136	138	271	271	147	151	157	157
BL	187	187	134	136	271	271	147	147	157	157
BL	183	189	130	136	271	271	153	153	157	157
BL	183	183	128	134	271	271	135	145	157	157
BL	187	187	132	134	271	273	147	147	157	157
BL	187	187	122	132	271	271	147	149	157	181
BL	187	189	122	122	271	271	159	159	157	157
BL	187	187	134	134	277	279	147	149	157	157
BL	187	187	122	134	271	271	147	153	157	159
BL	183	187	128	134	271	271	145	145	157	181
BL	183	187	134	134	271	279	147	147	157	181
BL	187	187	132	136	271	271	149	153	157	157

BL	183	183	132	134	271	271	147	159	157	157
BL	187	187	132	132	271	271	147	149	157	157
BL	183	187	134	136	271	271	153	153	157	157
BL	183	187	122	136	271	271			157	157
BL	183	187	132	136	271	271			157	157
BL	183	187	132	132	271	271			161	161
LM										
LM	187	187	124	124	279	279	141	153		
LM	187	189	120	124	279	279	137	141		
LM	187	189	124	124	273	277				
LM	187	187			277	279	141	143	157	157
LM	187	189			265	275	143	145	157	181
OR	187	189			275	281	141	141	157	159
OR	185	189	120	130			151	151		
OR							143	151		
OR										
OR	183	183	124	130	275	285	143	167	157	157
OR	187	189			267	281	155	155	157	157
OR	183	189	124	132	277	285	153	157	157	157
OR	183	189	130	130	269	273	149	149	157	169
OR	185	185	128	132	275	281	149	143	157	157
OR	185	189			277	281			157	157
OR	175	189	130	134	273	277	147	149	157	157
OR	183	187			269	277	143	149	157	157
OR	187	191	120	126	267	277	149	149	157	157
OR	183	191	122	122	267	275	141	155	157	157
OR	175	183	122	122	273	275	153	157	157	157
OR	175	189	120	124	269	273			157	165
OR	183	189	124	130	279	279	149	161	169	181
OR	183	189	124	130	275	283	149	161	157	157
OR	185	189	120	124	269	277			157	165
OR	183	187	124	130	275	275	149	159	157	161
OR	183	183	122	126	273	283	153	153	157	157
AF	183	183	124	136	275	277	143	143	157	157
AF	183	185			275	275	141	147	157	159
AF			124	124	273	277			157	157
AF	183	185					141	147	157	159
BF	183	183	122	134	277	279	147	147	157	181
BF	183	187	128	134	279	281	147	149	157	181
BF	187	187	126	132	277	279	143	153	157	157
BF	183	183			279	281			181	181
BF	183	187	126	128	277	281	147	149	157	181
BF									157	181
BF	183	187	128	140	281	281	151	159	157	157
KF	175	175			277	281	157	173	173	175
KF	175	175	124	124	277	277	173	173	169	173
KF	175	175	124	132	271	277	157	157	169	173
KF	175	175	122	122	271	283	147	153	173	175
KF	175	175	122	122	279	279	137	143	173	173
PF	175	175			277	277			173	175

PF	175	175			277	279			169	171
PF	175	175	126	126	277	279	147	173	171	173
PF	175	175	122	124			147	161		
PF	175	175					173	173	169	171
PF	175	175			271	277	173	173	157	173
PF			138	138					173	175
SF	183	183	122	132	277	279	153	153	157	167
SF	185	185	122	122	277	277	147	149	157	157

Appendix E Cont'd. Individual genotypes of six loci from red squirrels populations (pop) outside of the Black Hills. See Ch. 8 for population abbreviations.

Pop	**Six Loci**											
	Thu38		Thu41		Thu42		Thu50		Thu55		Thu59	
CV	290	298	263	263	240	254	279	281	266	270	98	116
CV	290	298	263	263	238	252			266	270	98	116
CV	290	294	221	273			271	281	266	266	96	98
CV	290	298	265	269	232	232	283	283	258	268	90	118
CV	288	288	259	265	252	254	281	281	252	266		
CV	288	298	257	259	234	248	277	279	256	258	118	118
NH	288	290	221	221	248	250	271	279	258	266	98	102
NH	290	290			252	252	289	289	254	258	88	104
NH	288	294	267	267	234	256	281	295	256	270	102	102
NH					232	250	271	279				
NH	288	290	221	221	234	254	279	279	288	288	90	90
NH	288	288			250	252			262	268	90	110
PB	296	296	261	261					260	268	100	102
PB	290	290	221	231			277	277	260	262	108	114
PB	290	294			242	242			266	266	90	106
PB	288	298							264	266	90	106
PB	290	294	269	269	242	246	277	281	266	266	90	114
PB	290	290	227	273	252	252	271	277	258	262	102	102
PB	288	298			250	252	287	287	264	266	90	106
PB	294	294			254	256	279	281	256	268	102	110
PB	290	294			242	246	277	281	266	266	90	114
PB	288	294			244	244	269	281	260	270		
RSE	290	298	223	257	248	250	279	279	260	270	102	102
RSE	288	288	221	259	250	250	271	283	260	262	114	114
BL			259	259	254	256	279	279			98	106
BL			259	259	254	254	279	287			98	98
BL			257	257	254	256	277	279			96	100
BL	296	298	259	259	234	256	281	281	258	266	98	108
BL	296	298	259	259	250	254	281	281			98	98
BL	298	298			254	256	279	287	266	266	108	108
BL	296	298			256	256			258	268	98	100
BL	292	298	259	259	252	256	279	279	266	266	106	106
BL	298	298	259	259	254	256	279	281	266	266	108	108
BL	292	298			252	254	279	285	266	266	104	104
BL	296	298			252	256	279	279	266	266	106	106
BL	296	298	259	259	252	256	279	279	258	266	102	110
BL			259	259	252	254	279	283	266	266	98	108

BL	298	298	259	259	256	256	279	283	266	270	104	104
BL	298	298	269	269	252	252	279	287	266	266	98	108
BL	298	298	259	269	252	256	279	283	266	266	106	112
BL	292	298	259	259	232	252	279	279	266	266	104	108
BL	292	298	259	259	250	252	279	279	266	266	100	108
BL	296	296	259	259	252	256	279	279	266	266	108	110
BL	298	298	259	259	256	256	279	279	266	270	104	108
BL	298	298	259	259	254	254	279	279			108	108
BL	298	298	259	259	254	254			266	268	98	100
BL	298	298	259	259	232	254	279	279	266	268	106	108
LM	288	288										
LM	288	298			234	254	279	279	262	264		
LM					246	254	277	277	264	270		
LM	288	288			252	252	277	277			120	120
LM	288	288			252	252	277	277	262	270	82	120
LM	288	288			250	250	277	277	262	288	80	80
OR												
OR	294	294	221	265	228	254	279	281	262	266	112	100
OR												
OR	290	290										
OR	288	290	259	259	248	250	279	279	266	266	110	110
OR	288	288	257	257	246	246	269	273	266	270	94	94
OR	288	288	221	221	232	252	271	289	266	272	94	96
OR	288	288	259	259	234	250	271	271	264	270	112	120
OR	288	288	257	257	246	254	271	279	256	260	108	112
OR	288	288							256	268	82	82
OR	294	298	227	267	244	252	269	269	256	272	88	100
OR	288	290					271	279	266	270		
OR	288	288			234	252	281	289	264	266	98	98
OR					252	252	279	279	262	266	106	106
OR	288	290			248	250	273	289	268	270	104	104
OR	288	288			248	250	279	281	266	266		
OR	288	290			234	250	277	281	260	260	110	110
OR	288	290	221	221	250	254	277	277	266	268	92	92
OR	290	290	221	221	248	252	277	277	256	268	102	110
OR	294	294	221	221	248	256	277	277	262	268	92	110
OR	288	288	221	227	240	240	277	279	266	266	92	92
AF	288	288			246	248	281	281	260	266	82	82
AF	288	288	259	259	256	256	281	281	256	260	82	98
AF	288	292			258	270			258	270		
AF	288	288							258	266	82	82
BF	294	294			234	252	285	289	258	266	94	94
BF	292	292	241	269	234	254	287	289	258	258	104	104
BF	292	298	241	269	252	254	279	279	258	266	96	102
BF	292	294	259	269	254	256	289	289	258	266	94	94
BF	292	292	259	271	252	252	277	287	256	256	94	94
BF	294	298							260	268	102	102
BF	292	294	259	259	236	256	285	289	258	258	102	102
KF	288	288			248	248	273	275			78	78
KF	288	288	251	271	248	248	273	279			78	78

KF	288	288			248	250	273	273	262	262	80	80
KF	288	288	273	273	248	248	273	273			80	80
KF	288	288	265	269	248	248	273	279			80	108
PF	288	288	271	271	248	248	273	273			80	80
PF	288	288			248	248	273	273			80	80
PF	288	288			248	254	273	273	268	268	80	80
PF	288	288	267	275	244	250	273	273	288	288	78	80
PF											78	80
PF	288	288			246	250	273	273			80	80
PF	288	288			250	250	273	273			80	80
SF					248	252	273	281	248	266	102	106
SF	288	288			252	254	285	285	266	266	82	82

Appendix F. Matrix genetic distances (i.e., Nei's distances) between red squirrel populations based on microsatellite data.

CV	0.00000	0.40720	0.41544	0.56949	0.49706	0.65284	0.34972	0.62487	0.53079	0.69512	0.74772	0.62284	0.49840
NH	0.40720	0.00000	0.41609	0.50593	0.48138	0.58638	0.28026	0.59702	0.51440	0.67817	0.66696	0.56767	0.49520
PB	0.41544	0.41609	0.00000	0.53834	0.45910	0.54352	0.32628	0.57558	0.51204	0.71404	0.73543	0.58827	0.44858
RSE	0.56949	0.50593	0.53834	0.00000	0.69976	0.65605	0.46726	0.67063	0.71215	0.67094	0.79400	0.68998	0.69024
BL	0.49706	0.48138	0.45910	0.69976	0.00000	0.62029	0.47172	0.57827	0.39149	0.72272	0.74038	0.46482	0.10886
LM	0.65284	0.58638	0.54352	0.65605	0.62029	0.00000	0.47532	0.51074	0.62862	0.67988	0.70453	0.60959	0.62457
OR	0.34972	0.28026	0.32628	0.46726	0.47172	0.47532	0.00000	0.47444	0.46204	0.62045	0.64001	0.49245	0.48076
AF	0.62487	0.59702	0.57558	0.67063	0.57827	0.51074	0.47444	0.00000	0.64498	0.76639	0.76555	0.50199	0.61023
BF	0.53079	0.51440	0.51204	0.71215	0.39149	0.62862	0.46204	0.64498	0.00000	0.73199	0.74185	0.53513	0.42590
KF	0.69512	0.67817	0.71404	0.67094	0.72272	0.67988	0.62045	0.76639	0.73199	0.00000	0.31131	0.57073	0.71175
PF	0.74772	0.66696	0.73543	0.79400	0.74038	0.70453	0.64001	0.76555	0.74185	0.31131	0.00000	0.57263	0.74730
SF	0.62284	0.56767	0.58827	0.68998	0.46482	0.60959	0.49245	0.50199	0.53513	0.57073	0.57263	0.00000	0.53978